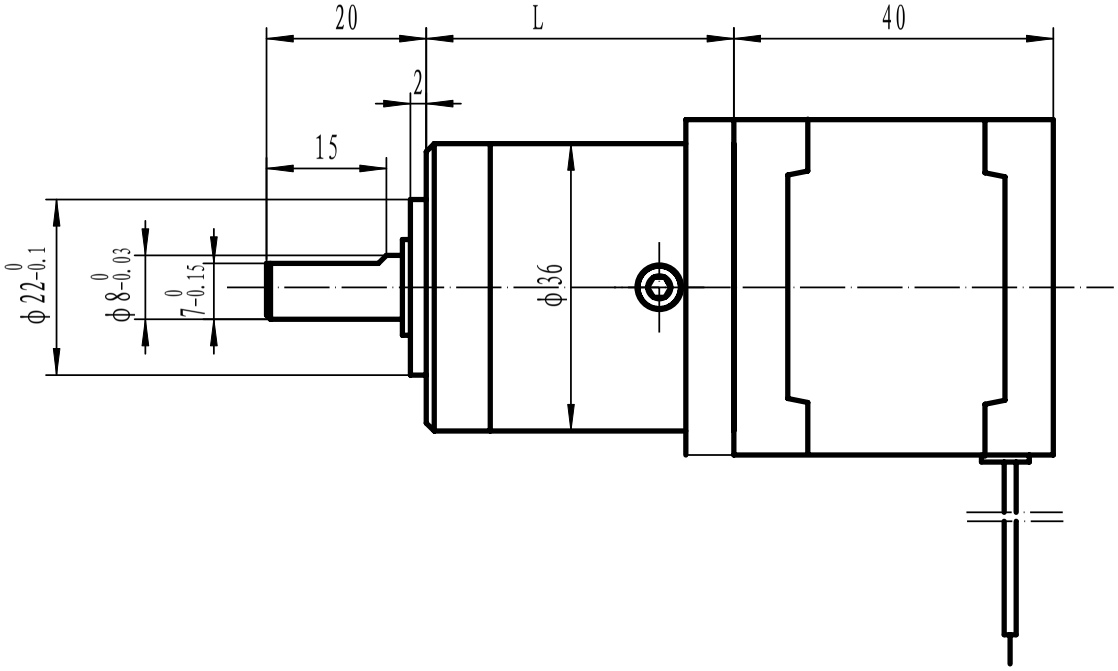

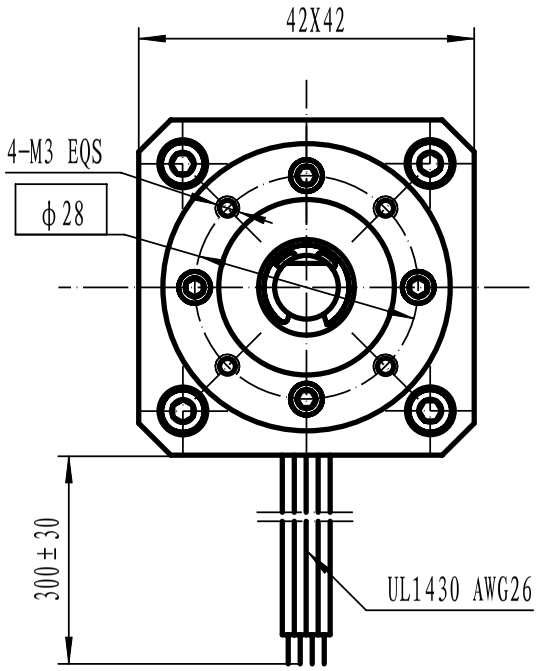

Gear Box Specifications:

Gear Ratio	1:5.18	1:27	1:100
Number of gear trains	1	2	3
Rated torque	18	30	48
Max.permissible load in a short time	45	80	100
Length (L)	31	38.5	48.2

Stepper Motor Specifications:

MODEL	Phase	Step Angle	Rated Voltage	Current /Phase	Resistance /Phase	Inductance /Phase	Holding Torque	Rotor Inertia
		Deg/Step	V	A	ohms	mH	g.cm	g.cm^2
42STH38-1684A	2	1.8	2.8	1.68	1.65	3.2	3600	57

Wiring Diagram:

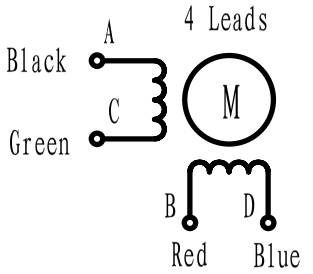

Rotation:

CW Direction	Step	A	C	B	D
↓	1	+		+	
	2		+	+	
	3		+		+
	4	+			+
	1	+		+	

CW Direction, see from the flange side. (Only Motor)

REV.	QTY.	No.	SIG.	DATE			
DESIGN	ZHUGUANGHUA	2012.06.14	STD.		CLS.MAK	QTY	SCALE
CHECK					S		1.5:1
PROC.			APPR.		PAGE	OF	

DONGZHENG MOTOR

36JX30K/42STH38-1684A
PLANET GEAR STEPPER MOTOR OUTSIDE DRAWING

0DZ.290.001

REV