iMD16
16 Amp 7-30V Industrial DC motor Driver

Datasheet

Rev 1.0
April 2026

Information in this publication regarding device applications and the like is intended only as a suggestion and may be superseded by updates. It is your responsibility to ensure that your application meets your specifications. No representation or warranty is given, and no liability is assumed by Cytron Technologies Incorporated with respect to the accuracy or use of such information or infringement of patents or other intellectual property rights arising from such use or otherwise. Use of Cytron Technologies's products as critical components in life support systems is not authorized except with express written approval by Cytron Technologies. No licenses are conveyed, implicitly or otherwise, under any intellectual property rights.

1. Product Overview and Functional Description

Figure 1 shows the physical layout and interface of the iMD16 motor driver, including power input terminals (7–30VDC), motor output terminals, status indicators, and control interfaces. Integrated control options include a speed control potentiometer, direction switch input, and PWM/DIR input for external control.

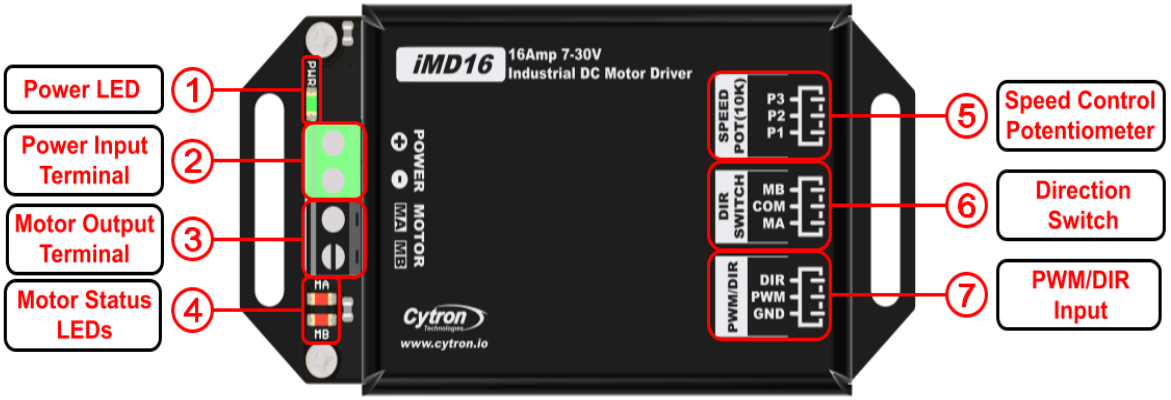

Figure 1: *iMD16 Layout*

No.	Function	Description
1	**Power LED**	Indicator LED. Lights up when the supply voltage is present.
2	**Power Input Terminal**	Input terminal for external DC power supply (7–30 V DC).
3	**Motor Output Terminal**	Output terminal for DC motor connection. Provides bidirectional drive capability.
4	**Motor Status LEDs**	Status indicator LEDs. Indicate motor operating conditions.
5	**Speed Control Potentiometer**	3-pin JST PH connector for a 10 kΩ potentiometer. Provides analog speed control input.
6	**Direction Switch**	3-pin JST PH connector for a 3-way rocker switch for motor direction control (Forward, Stop, and Reverse).
7	**PWM/DIR Input**	3-pin JST PH connector for external control interface. Accepts a PWM signal for speed control and a DIR signal for direction control. Refer to **Table 2** for logic definition.

Table 1: *Functional Description*

2. Input Mode Connection Diagrams

⚠️ **CAUTION: Power Supply Voltage Spikes** when DC brush motors generate significant Back-EMF during braking or direction changes. If using a Switching Power Supply (SMPS), this reverse current can cause voltage rails to overshoot, potentially damaging the driver or tripping the SMPS protection circuits.

Recommendation: Use a battery power supply where possible, as it safely absorbs Back-EMF. If an SMPS must be used, large electrolytic bulk capacitors or external TVS/clamping diodes must be added to the power rail to suppress voltage spikes.

PWM/DIR input mode enables external microcontroller control: the PWM input modulates speed, while the DIR input sets rotation direction.

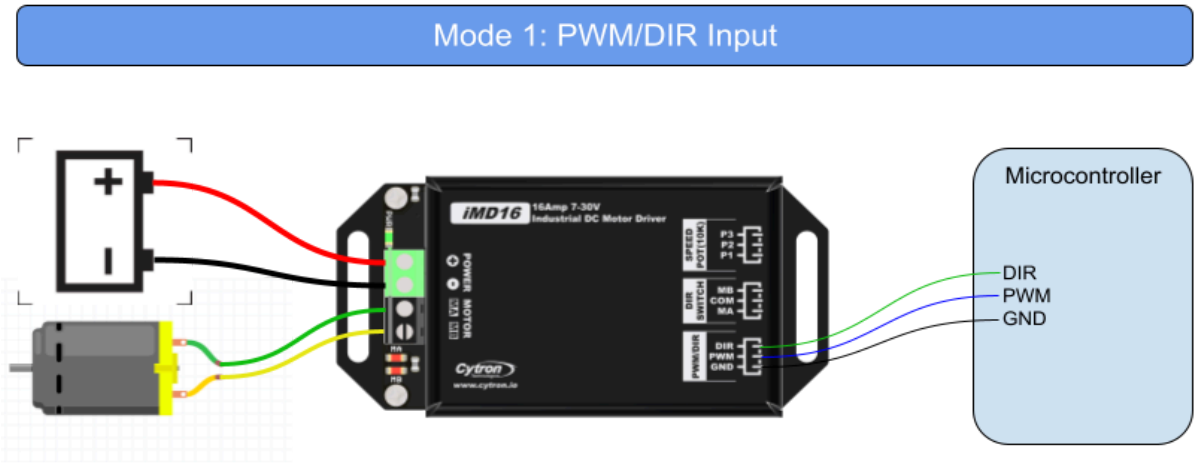

Figure 2: *PWM/DIR Input Mode Connection*

PWM	DIR	Output A (MA)	Output B (MB)	Motor Operation
Low	**X (Don't Care)**	Low	Low	Brake
High	**Low**	High	Low	Forward
High	**High**	Low	High	Reverse

Table 2: *PWM/DIR Input Truth Table*

POT/SWITCH Input Mode is a standalone control mode that uses a potentiometer for PWM-based speed control and a 3-way switch for motor stop, forward, and reverse control. The driver interprets these signals internally, eliminating the need for an external microcontroller.

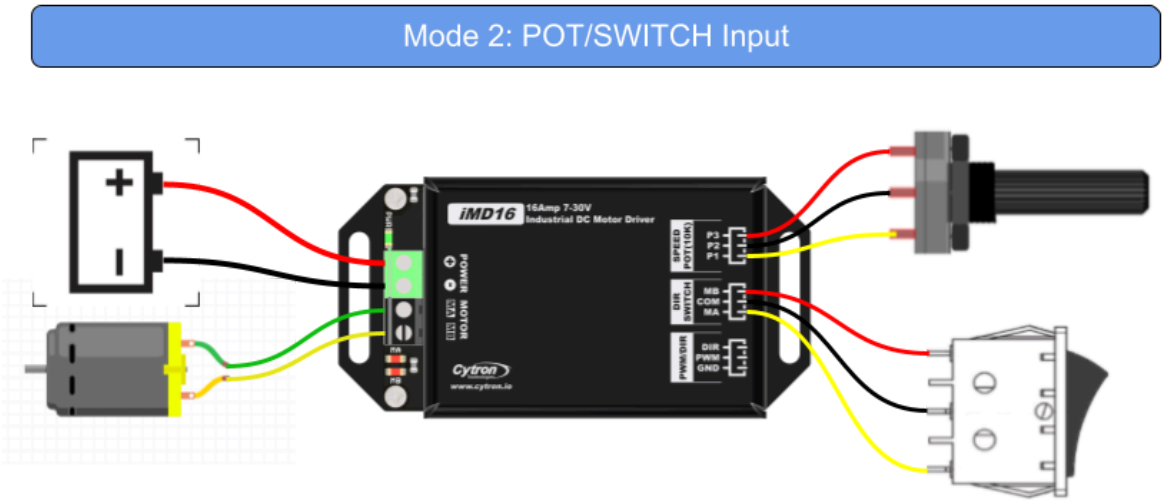

Figure 3: *POT/SWITCH Input Mode Connection*

3. Technical Specifications

Table 3 defines the electrical and operational limits of the iMD16 motor driver, including input voltage range, continuous and peak current ratings, logic input thresholds, and supported PWM frequencies for both internal generation and external control.

No	Parameters	Min	Max	Unit
1	Power Input Voltage	7	30	V
2	Maximum Motor Current - Continuous	-	16	A
3	Maximum Motor Current - Peak (Less than 10 seconds)	-	30	A
4	Logic Input Voltage - Low Level (PWM, DIR)	0	0.5	V
5	Logic Input Voltage - High Level (PWM, DIR)	3	30	V
6	Internal PWM Generator Frequency *(Output frequency when the potentiometer is used)*	9	11	KHz
7	External PWM Input Frequency *(Output Frequency = Input Frequency)*	DC	20	KHz

Table 3: *Technical Specifications*

Note: iMD16 does not have a current limiting function. The 16A continuous and 30A peak (<10 seconds) ratings indicate the maximum supported operating currents, not an active current limit imposed by the driver. Operating above the rated current may cause the board to overheat and could damage it.

4. Product Dimension

Figure 4 shows the physical dimensions of the iMD16.

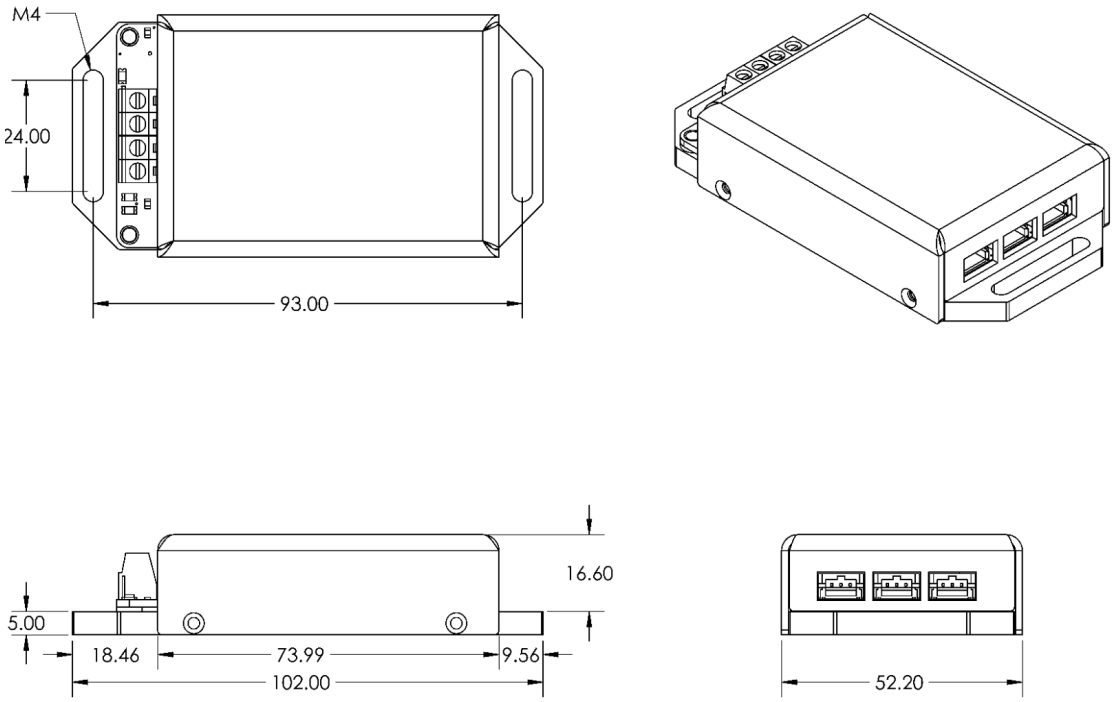

Figure 4: *iMD16 Dimension (in mm)*

Prepared by:

Cytron Technologies Sdn Bhd
www.cytron.io
No. 1, Lorong Industri Impian 1,
Taman Industri Impian,
14000 Bukit Mertajam,
Penang, Malaysia.

Tel: +604 - 548 0668
Fax: +604 - 548 0669

Email:
support@cytron.io
sales@cytron.io