SENSECAP

THE NEW GENERATION LORAWAN SENSORS OF SENSECAP

S2100 LoRaWAN Data Logger User Guide

Version: v1.2.2

Table of Contents

1. Product Introduction 4
2. Part List 5
3. Quick Start 6
3.1 Sensor Configuration Example 6
4. Hook up the Sensor Probe 7
4.1 Preparation 7
4.1.1 Sensor Probe 7
4.1.2 Tools 7
4.2 Connect the Sensor Probe 8
4.2.1 Disassemble the Data Logger 8
4.2.2 Power supply options of sensor 9
4.2.3 How to install external 12V DC 10
5. LED of Sensor Working Status 14
6. SenseCAP Mate App 16
6.1 Download App 16
6.2 How to connect sensor to App 16
6.2.1 Create a New Account 16
6.2.2 Connect to Sensor to App 17
6.3 Configure basic parameters through App 19
6.3.1 Select the Platform and Frequency 19
6.3.2 Set the Interval 24
6.3.3 Set the EUI and Key 24
6.3.4 Set the Packet Policy 25
6.3.5 Set the Activation Type 25
6.3.6 Restore Factory Setting 26
6.4 Configure Level or Pulse Sensor via App 26
6.4.1 Set the Level Mode 28
6.4.2 Set the Counter Mode 28
6.5 Configure Analog Sensor via App 30
6.5.1 Set the 4~20mA sensor 31
6.5.1 Set the 0~10V Voltage sensor 32
6.6 Configure RS485 Modbus-RTU Sensor via App 33
7. Connect to the SenseCAP Portal 36
7.1 SenseCAP Portal 36
7.1.1 Create a New Account 36
7.1.2 Other Functions 37

7.1.3 API Instruction 37
7.2 Connect to SenseCAP with Helium Network 38
7.2.1 Quick Start 38
7.2.2 Preparation 38
7.2.3 Bind Sensor to SenseCAP Portal 39
7.2.4 Setup the Sensor 41
7.2.5 Set Frequency of Sensor via SenseCAP Mate App 42
7.2.6 Check Data on SenseCAP Portal 43
7.3 Connect to SenseCAP with private TTN 45
7.3.1 Quick Start 45
7.3.2 Preparation 45
7.3.3 Bind Sensor to SenseCAP Portal 46
7.3.4 Setup the Sensor 47
7.3.5 Set Frequency of Sensor via SenseCAP Mate App 47
7.3.6 Check Data on SenseCAP Portal 48
8. Connect to Helium Network 49
9. Connect to The Things Network 49
10. Payload Decoder 50
10.1 Decoder Code 50
10.2 Packet Parsing 50
10.2.1 Packet Initialization 50
10.3 Data Parsing Example 52
10.3.1 Example - one measurement 52
10.3.2 Example - two measurements 53
10.3.3 Example - four measurements 53
10.3.4 Example - six measurements 54
10.3.5 Battery Information 56
11. LoRaWAN Downlink Command 58
11.1 Set the Data Uplink Interval 58
11.2 Reboot the device 59
11.3 How to send downlink 59
12. Error Code 60
12.1 Details 60
13. Device Installation 61
13.1 Check the waterproof performance of the device 61
13.1.1 Data logger connection port 61
13.1.2 Waterproof check 61
13.2 Installing Sensor 61

13.2.1 Installing the Sensor Bracket 61
13.2.1 Mount on Pole and Wall 63
13.3 Replace the Battery 64
13.3.1 How to Buy the Battery 64
13.3.2 How to Replace a New Battery 65
14. Trouble Shooting 67
14.1 Sensors can't join LoRa network, how to do? 67
14.2 Why is the new sensor's battery not 100%? 67
14.3 Support 67
14.4 Document Version 67

1. Product Introduction

S2100 LoRaWAN Data Logger can collect data from different types of sensors and transfer the data through LoRaWAN network. If you have deployed sensors that are not based on the LoRaWAN network, then with our LoRaWAN Data Logger, you can change them into LoRaWAN-based sensors and use the LoRaWAN network to transfer data. You can easily enjoy the advantages of LoRaWAN technology such as low power consumption and long transmission range, without affording the cost of changing the sensors you are using.

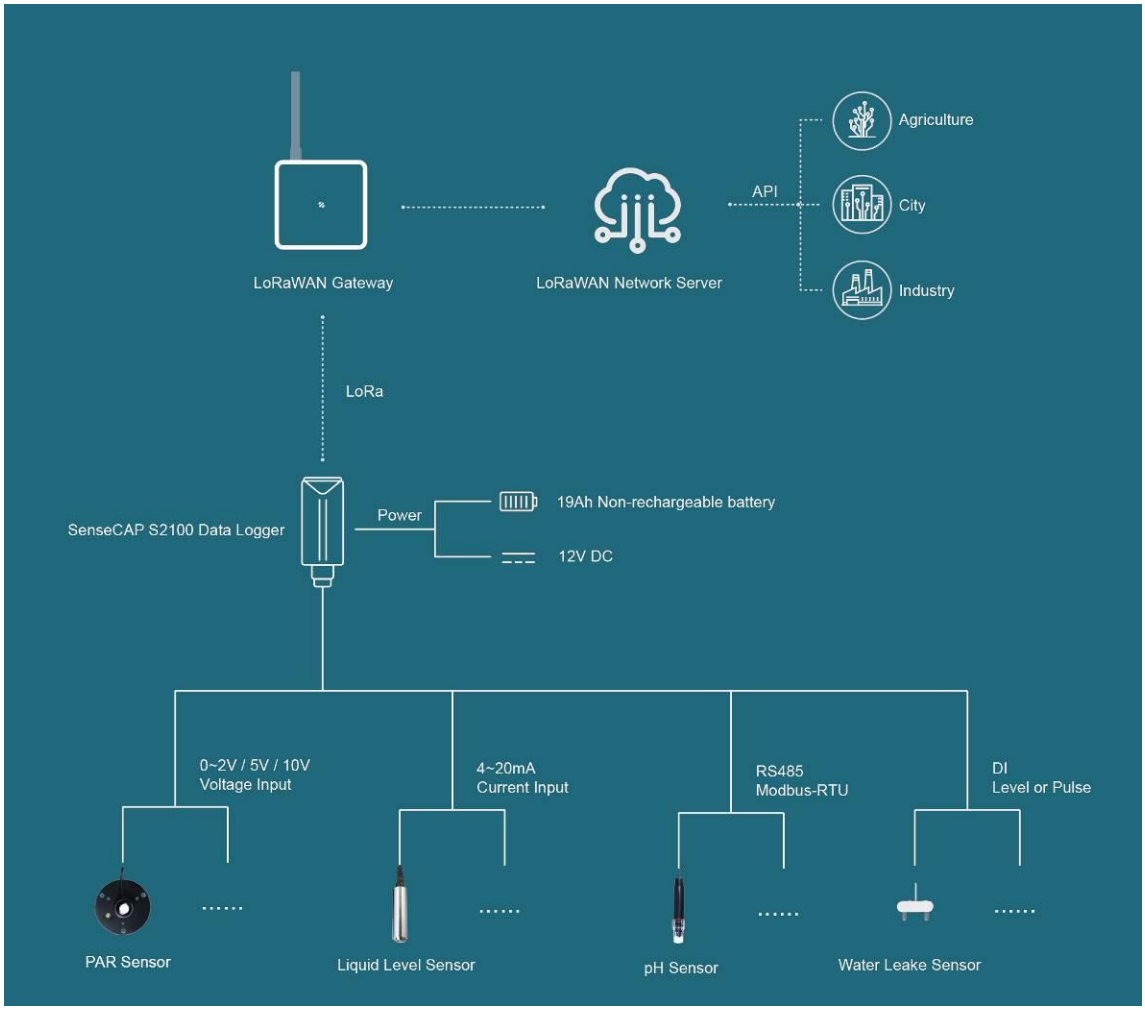

2. Part List

Before installing, please check the part list to ensure nothing is missing.

Picture	Name	Quantity
	Data Logger	1
	Bracket	1
	Quick Start Guide	1
	KA4*20mm Self-drilling Screw	4

A junction box accessory kit is available as an additional option, and be ordered separately:

Picture	Name	Quantity
	Junction box	1
	8 pin wire (40cm)	1
	Waterproof adhesive tape	1

3. Quick Start

Refer to the following steps for quick configuration with SenseCAP server.

Step	Description	Section
1	Hook up the sensor probe	Section 4
2	Download SenseCAP Mate App	Section 6.1
3	Configure the LoRaWAN parameters	Section 6.3
4	Configure the sensor protocol	Section 6.4 for level / pulse sensor Section 6.5 for analog sensor Section 6.6 for RS485 sensor
5	Join LoRaWAN network server	Section 7.2 or 7.3
6	Check the data on the SenseCAP Dashboard and SenseCAP Mate App	Section 7.2.6
7	Deploying sensors	Section 12

3.1 Sensor Configuration Example

Please direct you to:

https://files.seeedstudio.com/products/SenseCAP/S2100/How_to_Configure_the_Template_for_S2100_Data_Logger.pdf

4. Hook up the Sensor Probe

4.1 Preparation

4.1.1 Sensor Probe

Get one of these sensors ready:

Type	Sensor wire pin
RS485 Modbus-RTU	1 x A, 1 x B, 1 x GND, 1 x VCC
4~20 mA	1 or 2 x signal pin
0~10V	1 or 2 x signal pin
Level	1 x signal pin
Pulse Count	1 x signal pin

⚠ ***Note:***

Each Data logger ***can only be connected to one type of sensor****. For example*

1. a RS485 sensor with one address

2. a 4~20mA sensor with 1or 2 measurements

3. a 0~10V (Less than 10v) sensor with 1or 2 measurements

4. a pulse or level sensor with 1 measurement

4.1.2 Tools

Type	Description
Cross screwdriver	Cross recess No.2

4.2 Connect the Sensor Probe

4.2.1 Disassemble the Data Logger

1. Unscrew three screws.

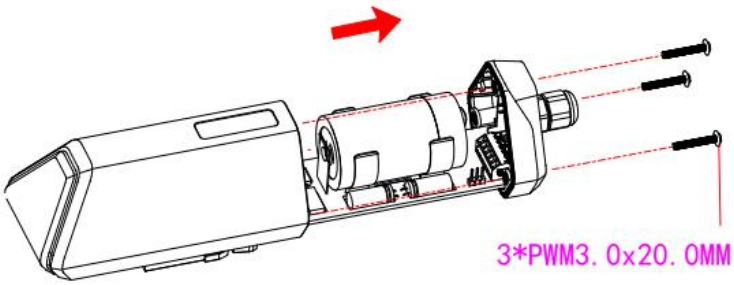

2. Take down the cover.

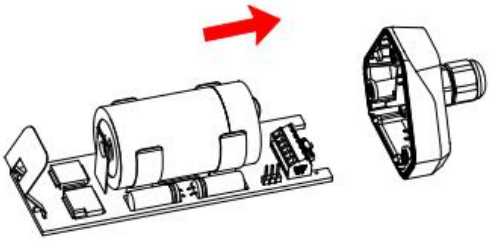

3. Remove the thread cap and pass it through the cable of the sensor, pass it through the bottom cover, and connect it to the wiring terminal.

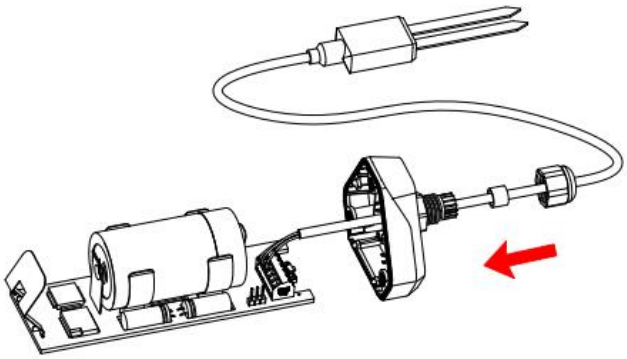

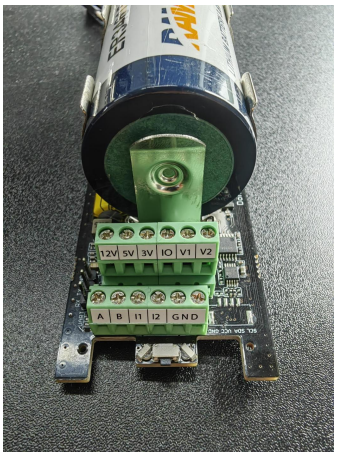

No.	Pin	Description
1	12V	External 12V input voltage. The Data Logger can be powered by an external 12V DC power supply. When using 12V power supply, the battery will serve as backup power supply.
2	5V	5V output voltage, providing 5V voltage to the sensor.
3	3V	3V output voltage, providing 3V voltage to the sensor.
4	IO	Acquisition level or pulse input
5	V1	Analog voltage input ranges from 0 to 10V
6	V2	Analog voltage input ranges from 0 to 10V
7	A	RS485 A/+
8	B	RS485 B/-
9	I1	Analog current input ranges from 4 to 20mA
10	I2	Analog current input ranges from 4 to 20mA
11	GND	Ground
12	GND	Ground

4.2.2 Power supply options of sensor

Data Logger supports two power supply modes:

Mode	Description
Built-in Battery	When the Data Logger and sensors only powered by internal battery. The datalogger only support 5V or 3V sensor probes.
External 12V DC	If some cases, the sensor probe needs a higher power source which the internal battery cannot last for long time. An external 12V power source could be the main power supply, and the internal battery works as a backup power source when the 12V power outage happen.

	When using external 12V power supply, it is recommended that working together with the junction box to make sure the waterproof covered.

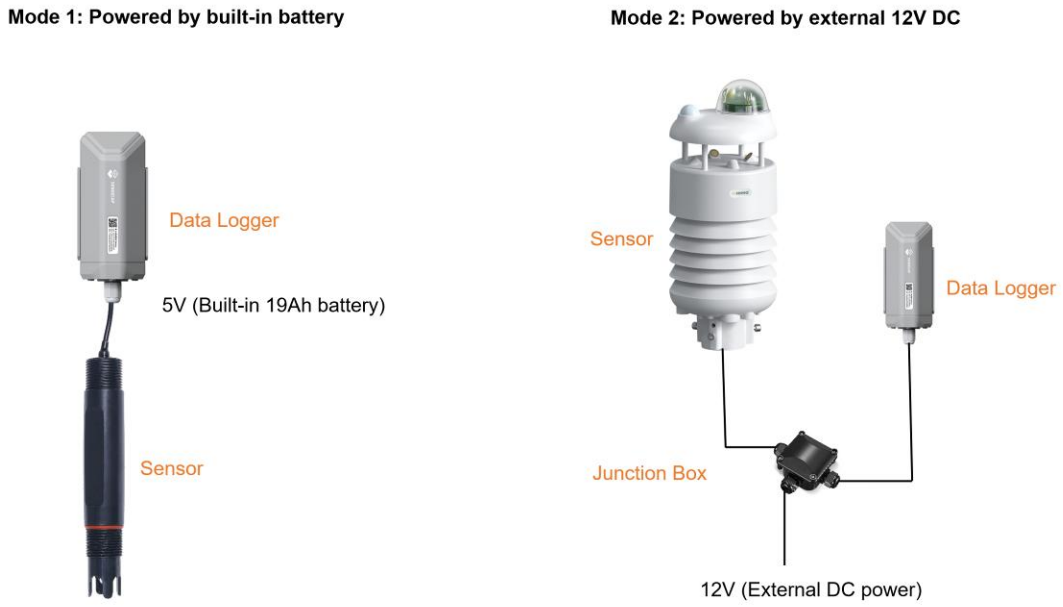

4.2.3 How to install external 12V DC

When your sensor needs 12V power, the internal battery will not be able to feed the sensor. Therefore, an external 12V power supply is required.

Take the SenseCAP ONE Weather Station as an example.

1) Prepare the12V DC adapter, Junction box, and 4-pin wire.

2) Wire the RS485-A, RS485-B and GND and external 12V input to the green terminal.

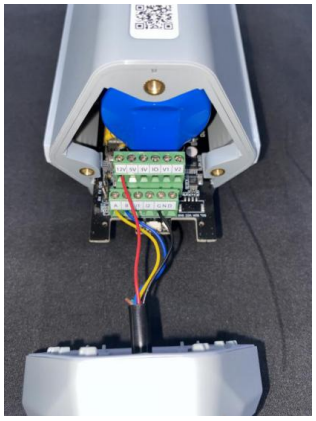

Definition of the cable:

Wire color	The pin of Data Logger
Red	12V
Black	GND
Yellow	A
Blue	B

3) Put the device circuit board back to enclosure, and make sure the waterproof rubber is well assembled.

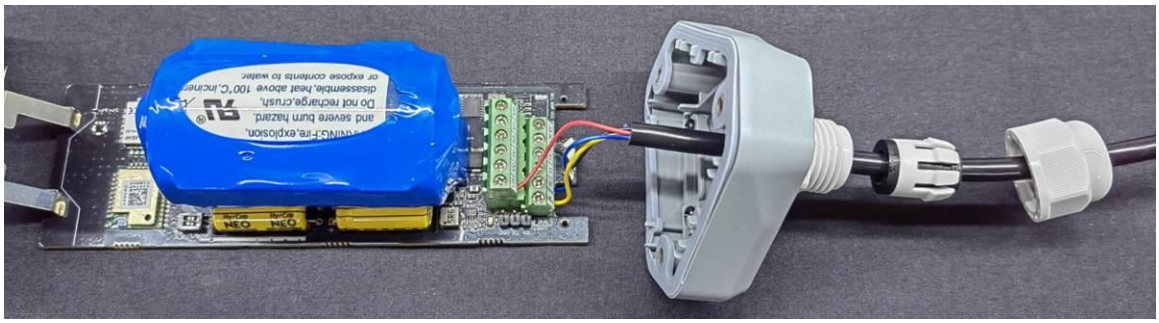

4) Wire to the terminal of the junction box.

5) Connect the sensor wire to the junction box.

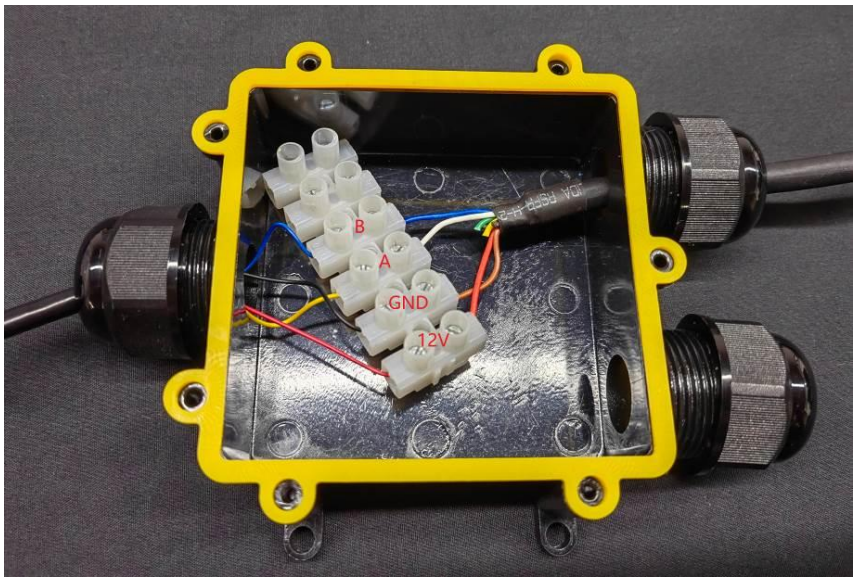

6) Connect the 12V DC adapter to the power supply.

7) To complete the assembly.

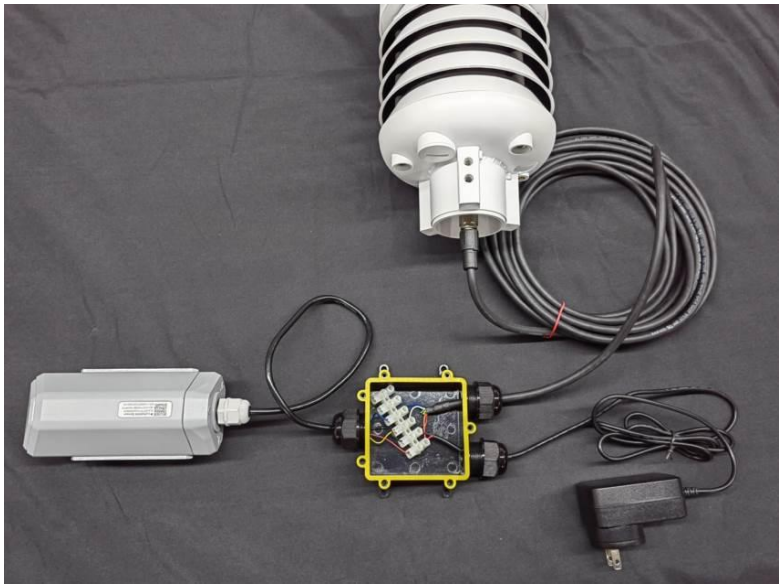

8) Tighten the screws and screw caps to check the waterproofing. If the wire diameter is too thin, add waterproof tape for winding.

*Note: When assembling the device, it is necessary to install the waterproof pad of the Data Logger and the adapter box, and tighten the screw cap and screw, otherwise the waterproof effect of the device may be affected!

If the wire diameter is too small, it can be wrapped with waterproof tape, as shown below:

5. LED of Sensor Working Status

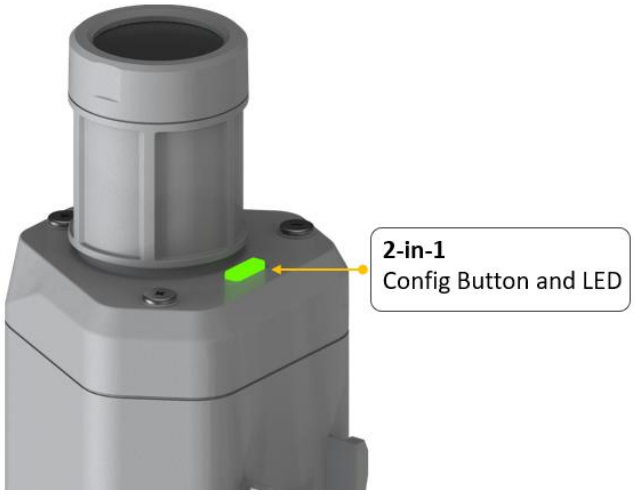

The LED has green and red color, which indicates the device working status explained in the follow table:

Actions	Description	Green LED Status
First power up, press and hold for 3s	Power on and activate the Bluetooth	Green LED flashes at 1s frequency, waiting for Bluetooth connection. If Bluetooth not connected within 1 minute, the device would shut down again.
Press once	Reboot device and join LoRa network	1. The green LED will be on for 5 seconds for initialization. 2. Waiting for join LoRa network: red breathing light flashing 3. Join LoRa network success: green LED flashes fast for 2s 4. LoRa network join failure: red LED suddenly stop.

Press and hold for 3s	Activate Bluetooth again	1. Waiting for Bluetooth connection: green LED flashes at 1s frequency 2. Enter configuration mode after Bluetooth connection is successful: green LED flashes at 2s frequency If Bluetooth is not connected within 1 minute, the device will reboot and join LoRa network.
Press and hold for 9s	Power off	In the 3rd seconds will start flashing at 1s frequency, until the light is steady on, release the button, the light will go out.

Note:

*1.After power off, you need to **reconfigure the frequency band.** Power off is recommended when not deployed.*

2. If the frequency is not configured after power on, the device will be power off again.

6. SenseCAP Mate App

6.1 Download App

As a tool, SenseCAP Mate App is used to configure LoRa parameters, set interval, bind devices to your account and check device basic information.

(1) For iOS, please search for "SenseCAP Mate" in the App Store and download it.

Download SenseCAP Mate App

(2) For Android, please search for "SenseCAP Mate" in the Google Store and download it.

You can also download App from https://install.appcenter.ms/orgs/seeed/apps/sensecap-mate/distribution_groups/public

6.2 How to connect sensor to App

6.2.1 Create a New Account

SenseCAP Mate supports device configuration and remote management. To use the SenseCAP Portal platform and other functions, please register an account.

SenseCAP Mate supports offline functionality, and you can opt out of an account if you only use the configuration sensor. Just click Skip.

Please select **Global** of Server Location.

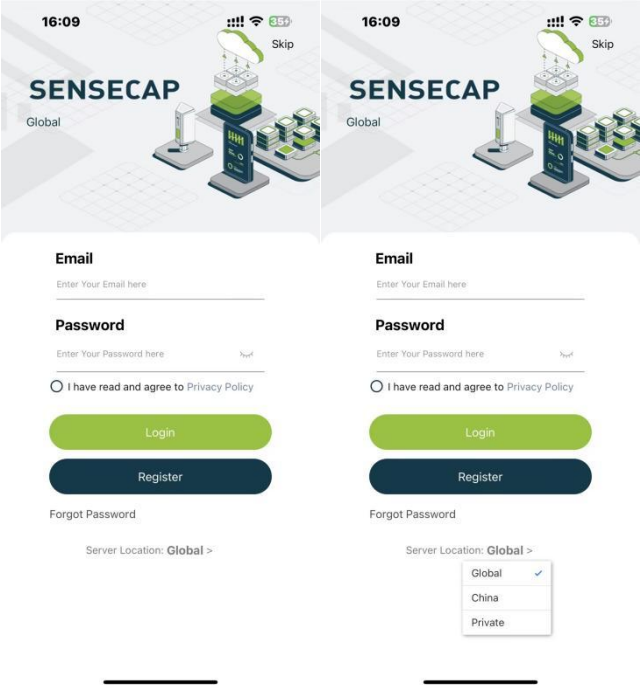

You can also create an account via the SenseCAP Portal: http://sensecap.seeed.cc

1) Select register account, enter email information and click "register", the registered email will be sent to the user's mailbox.

2) Open the "SenseCAP..."Email, click the jump link, fill in the relevant information, and complete the registration.

3) Return to the login interface and complete the login.

⚠ *Note:*

If you can't find the email, it may be automatically identified as "spam" and put in the "trash can".

6.2.2 Connect to Sensor to App

1) Press button and hold for **3 seconds**, the LED will flash at 1s frequency. Please use the App to connect the sensor within 1 minute; otherwise, the device will power off or reboot.

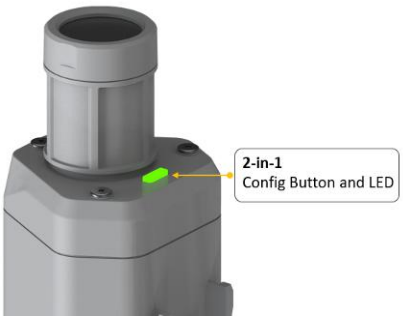

2) “User”>”Device Bluetooth Configuration”. Please select “S2100 Data Logger”.

Please click the “Setup” button to turn on Bluetooth and click “Scan” to start scanning the sensor's Bluetooth

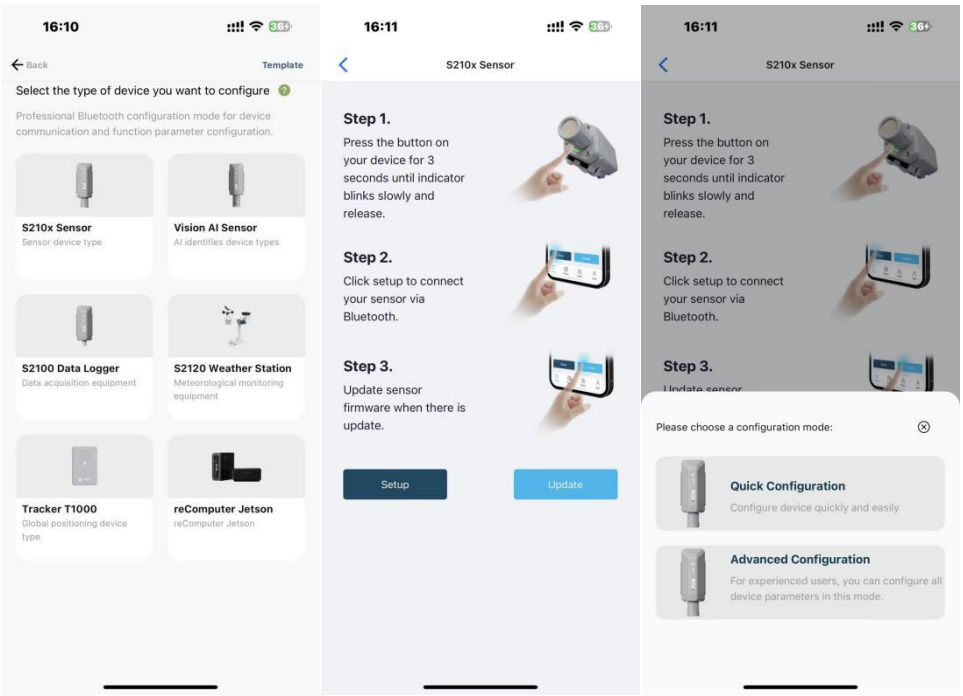

3) Select the Sensor by S/N (S/N is on the front label of the sensor). Then, the basic information of the sensor will be displayed after entering.

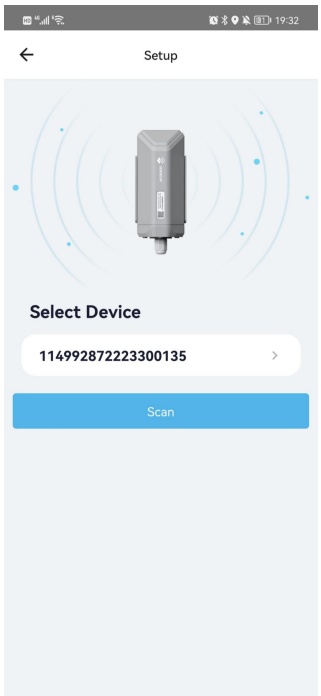

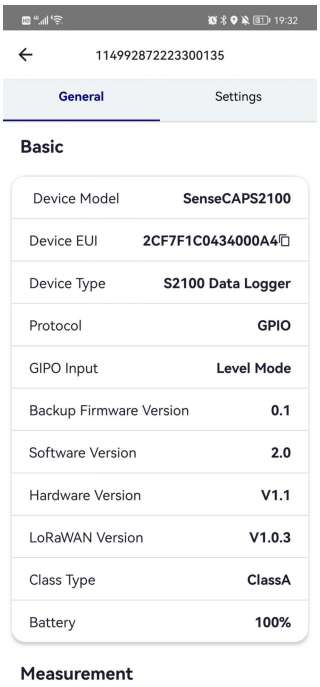

4) Enter configuration mode after Bluetooth connection is successful: LED flashes at 2s frequency.

6.3 Configure basic parameters through App

6.3.1 Select the Platform and Frequency

S210x Sensors are manufactured to support universal frequency plan from 863MHz ~928MHz in one SKU. That is to say, every single device can support 7 frequency plans.

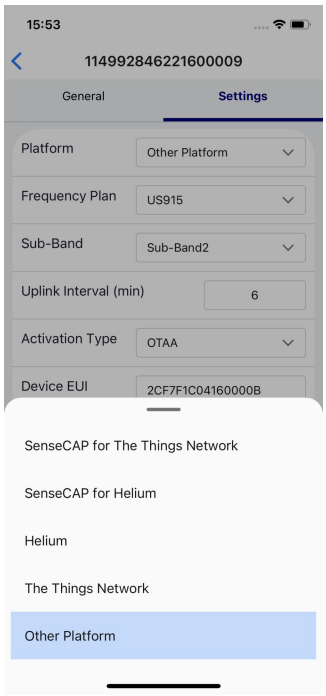

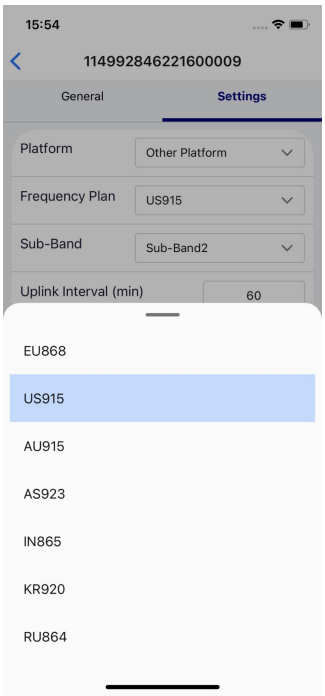

Platform	Description
SenseCAP for The Things Network	**Default platform.** It must be used with SenseCAP Outdoor Gateway (https://www.seeedstudio.com/LoRaWAN-Gateway-EU868-p-4305.html). SenseCAP builds a proprietary TTN server that enables sensors to be used out of the box when paired with an SenseCAP outdoor gateway.
SenseCAP for Helium	When there is the Helium network around the user, data can be uploaded using sensors. Devices run on a private Helium console of SenseCAP. Users do not need to create devices on Helium console, right out of the box.
Helium	Connect Sensor to public Helium console.
The Things Network	Connect Sensor to your TTN(TTS) server.
Other Platform	Other LoRaWAN Network Server.

1) SenseCAP for Helium:

We provide the SenseCAP Portal to manage devices and data: **sensecap.seeed.cc**

We built a private Helium Console with an embedded SenseCAP Portal. When users get the SenseCAP sensors, you can use it by scanning the code and binding it to the Portal.

"SenseCAP for Helium" is selected by default. The device runs in a fixed main frequency and sub-band, refer to Helium Frequency Plan (https://docs.helium.com/lorawan-on-helium/frequency-plans/). You only need to select the main frequency, such as EU868 and US915.

SenseCAP for Helium supports the following frequency plan:

EU868 / US915 / AU915 / KR920 / IN865 / AS923-1 / AS923-2 / AS923-3 / AS923-4

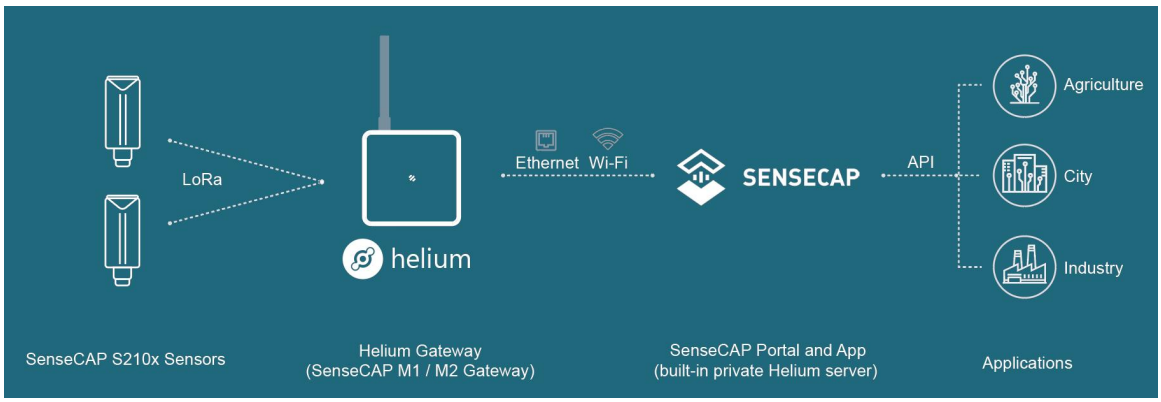

2) SenseCAP for The Things Network

SenseCAP Portal also builds the TTN private server, and the sensor must be used together with the SenseCAP Outdoor Gateway (*https://www.seeedstudio.com/LoRa WAN-Gateway-EU868-p-4305.html*).

Due to the limitation of the SenseCAP outdoor gateway frequency, "SenseCAP for TTN" supports the following frequency plan(The sensor is capable of supporting all frequency plan):

Gateway Frequency	Description
EU868	It must be used with SenseCAP EU868 Gateway (https://www.seeedstudio.com/LoRaWAN-Gateway-EU868-p-4305.html)
US915	It must be used with SenseCAP US915 Gateway (https://www.seeedstudio.com/LoRaWAN-Gateway-US915-p-4306.html)
AU915	Need to contact sales to purchase.

AS923-1	Need to contact sales to purchase.
AS923-2	Need to contact sales to purchase.

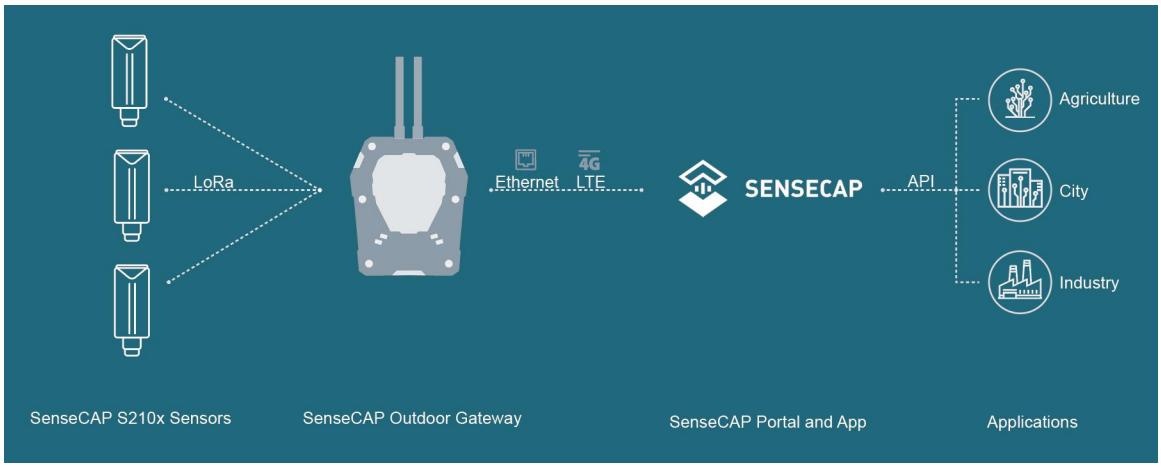

3) Helium

Users can choose sensors to use on the public helium console:

https://console.helium.com/

4) The Things Network

Users can choose sensors to use on the public The Things Network server:

https://console.cloud.thethings.network/

5) Other Platform:

When you use other LoRaWAN network server, please select Other Platform.

At this point, you need to determine the sensor frequency band according to the gateway frequency and sub-band.

S210x Sensors support the following frequency plan:

Sensor Frequency	Common Name	Sub-band
EU863-870	EU868	--------
US902-928	US915	Sub band from 1 to 8 (default sub-band 2)
AU915-928	AU915	Sub band from 1 to 8 (default sub-band 2)
KR920-923	KR920	--------
IN865-867	IN865	--------
AS923	AS923-1	Frequency plan for Helium
	AS923-2	
	AS923-3	
	AS923-4	
RU864-867	RU864	--------

Note1:

Different countries and LoRaWAN network servers use different frequency plans.

For Helium network, please refer to:

https://docs.helium.com/lorawan-on-helium/frequency-plans

For The Things Network, please refer to:

https://www.thethingsnetwork.org/docs/lorawan/frequency-plans/

Note2:

1) *When using the SenseCAP platform, the EUI, APP EUI and APP Key are fixed and are the same as the sensor label.*
2) *When the sensor is selected to be used with a public platform such as Helium or TTN, the EUI will not change, and the sensor will generate a new fixed App EUI and App Key for network access.*

6.3.2 Set the Interval

The working mode of device: wake up the device every interval and collect measurement values and upload them through LoRa. For example, the device collects and uploads data **every 60 minutes by default**.

Parameter	Type
Uplink Interval	Unit: minutes, number from 5 to 1440.

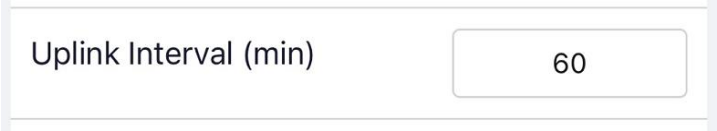

Note:

*The SenseCAP portal has a limit on uplink interval: minimum interval is **5 minutes**.*

The interval using the other platforms ranges from 1 to 1440 minutes.

6.3.3 Set the EUI and Key

The device uses OTAA to join the LoRaWAN network by default. So, it can set the device EUI and App EUI.

Parameter	Type
Device EUI	16 bits, hexadecimal from 0 ~ F
App EUI	16 bits, hexadecimal from 0 ~ F
App Key	32 bits, hexadecimal from 0 ~ F

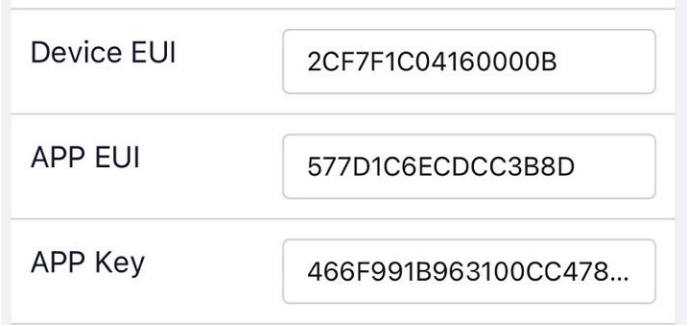

6.3.4 Set the Packet Policy

The sensor uplink packet strategy has three modes.

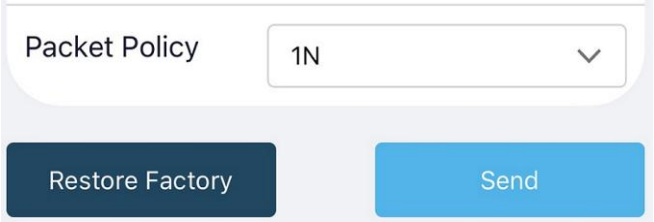

Parameter	Description
2C+1N (default)	2C+1N (2 confirm packets and 1 none-confirm) is the best strategy, the mode can minimize the packet loss rate, however the device will consume the most data packet in TTN, or date credits in Helium network.
1C	1C (1 confirm) the device will sleep after get 1 received confirm packet from server.
1N	1N (1 none-confirm) the device only send packet and then start to sleep, no matter the server received the data or not.

6.3.5 Set the Activation Type

The sensor supports two network access modes, OTAA by default.

Parameter	Description
OTAA (default)	Over The Air Activation, it joins the network through Device EUI, App EUI, and App Key.
ABP	Activation By Personalization, it joins the network through DevAddr, NwkSkey, and AppSkey.

When using ABP mode, you need to configure the following information:

Parameter	Description
DevAddr	32 bits, hexadecimal from 0 ~ F
NwkSkey	32 bits, hexadecimal from 0 ~ F

AppSkey	8 bits, hexadecimal from 0 ~ F

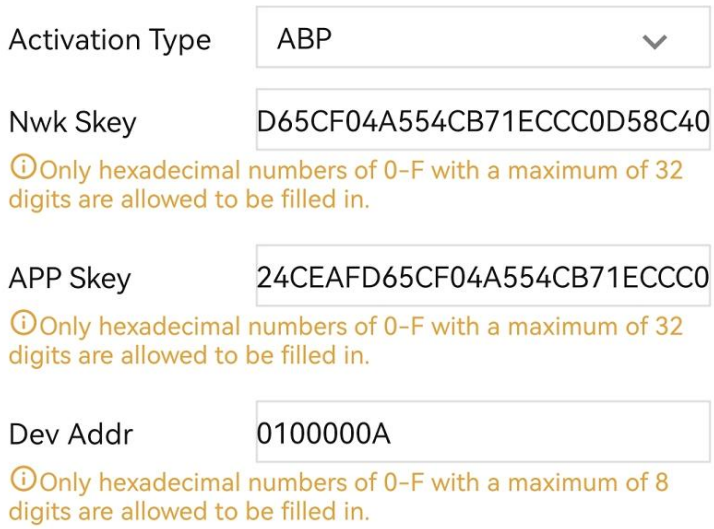

Note:

The factory defaults to a fixed key for ABP mode.

6.3.6 Restore Factory Setting

When selecting the SenseCAP platform, you must use the fixed EUI/App EUI/App Key. Therefore, you need to restore the factory Settings before switching back to the SenseCAP platform from other platforms.

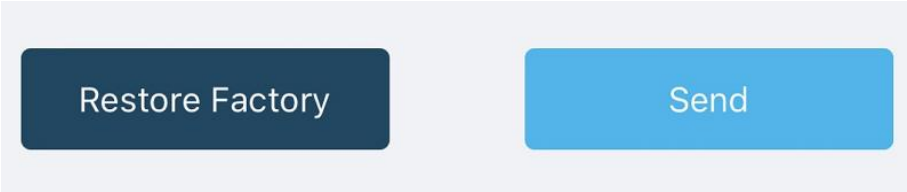

When we make a mistake or want to reset everything, we can click the button. The device will be restored to the factory's default configuration.

***Note:** The “Restore Factory” function can only reset the Basic Setting.

6.4 Configure Level or Pulse Sensor via App

1) Select the “GPIO” protocol.

2) Select the supply voltage to the sensor. It supports 3V/5V/12V. Please refer to section "Power Supply Options of Sensor".

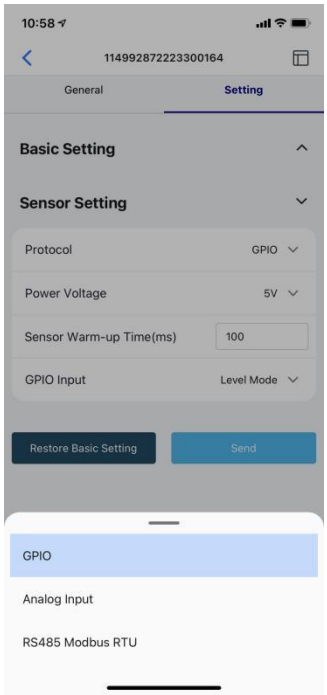

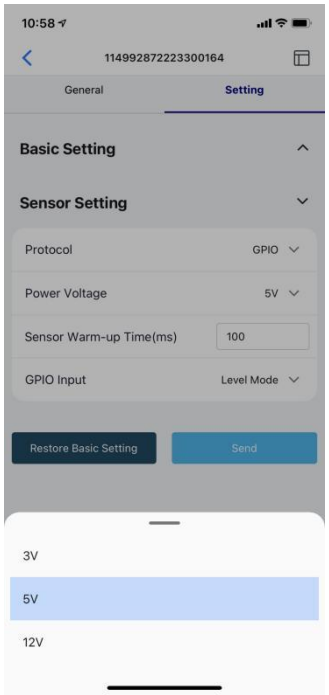

3) Set the “Sensor Warm-up time”, the warm-up time denotes the amount of time it takes for the sensor to attain its highest accuracy or performance level once the voltage supply has been applied.

4) Select the input type:

Level Mode	The input level signal is collected, the high level is 1, the low level is 0
Counter Mode	The pulse signal is collected, and the number of pulses is recorded

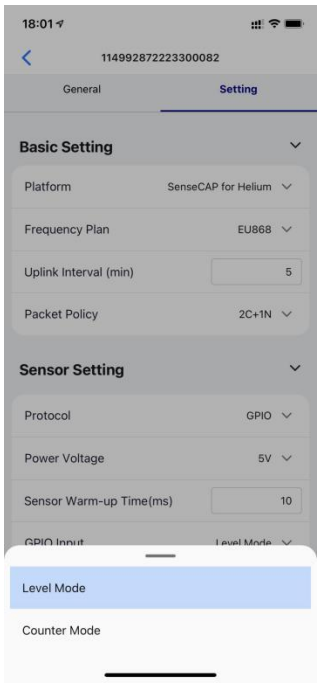

6.4.1 Set the Level Mode

If your sensor is a Level output senor.Select the “Level Mode” as input type.

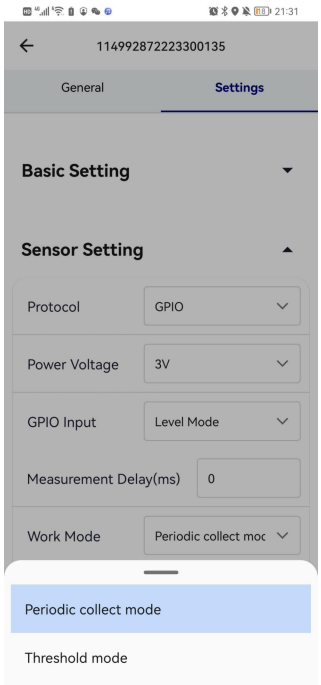

6.4.2 Set the Counter Mode

If your sensor is a pulse counter senor.Select the “Counter Mode” as input type. Then set the following parameters in turn.

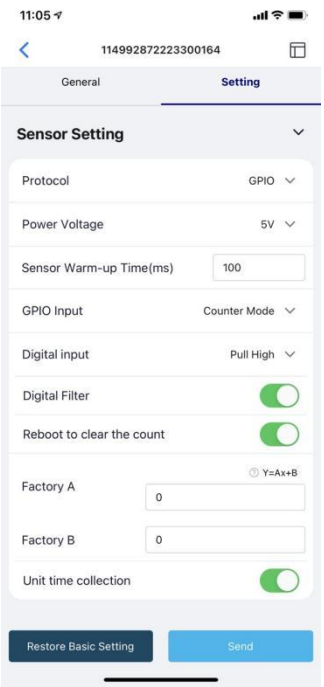

Sensor Warm-up Time	The warm-up time denotes the amount of time it takes for the sensor to attain its highest accuracy or performance level once the voltage supply has been applied.
Digital input	Sets the type of input pulse. Pull High: Valid when a rising edge is detected. Pull Low: Valid when a falling edge is detected.
Digital Filter	When the pulse width exceeds 10 ms, which advised to enable it. It is enabled by default.
Reboot to clear the count	When a Datalogger restart occurs, the count is cleared to 0. It is disabled by default.
Y= Ax + B	"Y": It is the value Datalogger will upload. "x": It is the original counter value. Factory A: Custom values that can be scaled up or down by multiples of the "x". Factory B: A custom value that increments or diminishes the value of the "x". By setting the values of A and B, you can calculate the desired value. If only raw counter values are uploaded, set A=1 and B=0.

Unit time collection	Enabling this function increases upload by a value: cumulative amount per hour. For example, if the value of Y within one hour is 1000, 1000/h will be uploaded.

6.5 Configure Analog Sensor via App

Select the “Protocol” as “Analog input”. Then set the following parameters in turn.

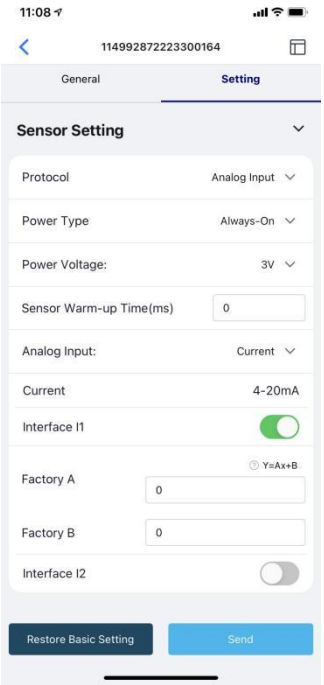

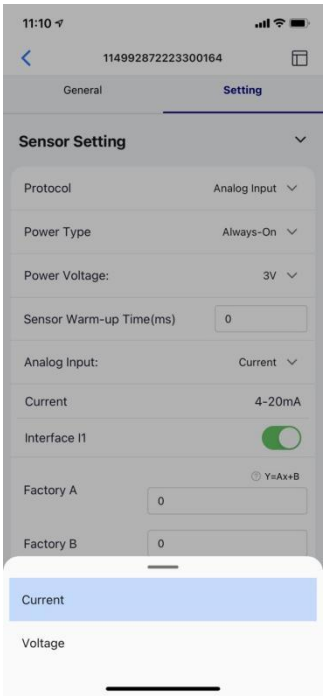

Power Type	Periodic power: Power the sensor before data collection, and power off the sensor after data collection. This mode reduces power consumption and increases battery life. Always-on: Select this mode when the sensor needs constant power supply. Generally, an external 12V DC power supply is used. If it is powered only by batteries, it may not work for long.
Power Voltage	Select the supply voltage to the sensor. It supports 3V/5V/12V. Please refer to section "Power Supply Options of Sensor".
Analog Input	Current: Select the current signal of the sensor from 4 to 20mA.

	Voltage: Select the voltage signal of 0~10V sensor.

6.5.1 Set the 4~20mA sensor

Sensor Warm-up Time	The warm-up time denotes the amount of time it takes for the sensor to attain its highest accuracy or performance level once the voltage supply has been applied.
Current Range	4~20mA
Interface I1	The Data Logger supports two analog current signals. When the sensor wire is connected to I1/I2, the configuration can be enabled.
Interface I2	
Y= Ax + B	"Y": It is the value Datalogger will upload. "x": It is the original current value. Factory A: Custom values that can be scaled up or down by multiples of the "x". Factory B: A custom value that increments or diminishes the value of the "x". By setting the values of A and B, you can calculate the desired value. If only raw values are uploaded, set A=1 and B=0.

6.5.1 Set the 0~10V Voltage sensor

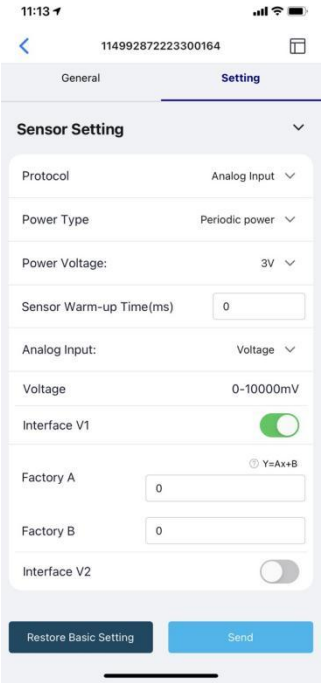

Sensor Warm-up Time	The warm-up time denotes the amount of time it takes for the sensor to attain its highest accuracy or performance level once the voltage supply has been applied.
Current Range	0~10V (The Data Logger can collect voltage signals within 0~10V and automatically adjust the upper limit to increase accuracy)
Interface V1	The Data Logger supports two analog voltage signals. When the sensor wire is connected to V1/V2, the configuration can be enabled.
Interface V2	
Y= Ax + B	"Y": It is the value Data Logger will upload. "x": It is the original current value. Factory A: Custom values that can be scaled up or down by multiples of the "x". Factory B: A custom value that increments or diminishes the value of the "x". By setting the values of A and B, you can calculate the desired value. If only raw values are uploaded, set A=1 and B=0.

6.6 Configure RS485 Modbus-RTU Sensor via App

Select the “Protocol” as “RS485 Modbus RTU”. Then set the following parameters in turn.

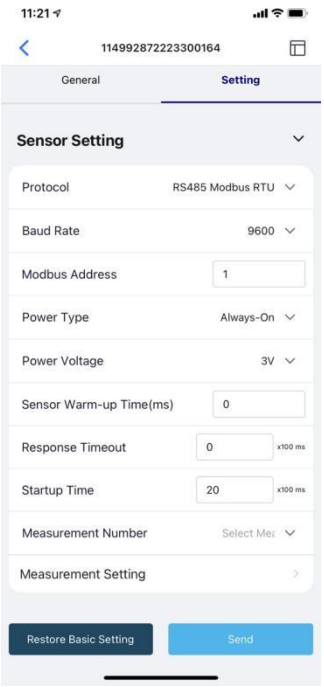

Baud Rate	Baud rate of communication with the sensor. Range: 4800/9600/14400/19200/38400/57600/115200
Modbus Address	Slave address of the sensor. The range is 1 to 247.
Power Type	Periodic power: Power the sensor before data collection, and power off the sensor after data collection. This mode reduces power consumption and increases battery life. Always-on: Select this mode when the sensor needs constant power supply. Generally, an external 12V DC power supply is used. If it is powered only by batteries, it may not work for long.
Power Voltage	Select the supply voltage to the sensor. It supports 3V/5V/12V. Please refer to section "Power Supply Options of Sensor".
Sensor Warm-up	The warm-up time denotes the amount of time it takes for

Time	the sensor to attain its highest accuracy or performance level once the voltage supply has been applied.
Response Timeout	After Data Logger initiates a data read request to the sensor, it waits for the timeout time for a response. If this time is exceeded, the command will be resent; unit: 100 milliseconds.
Startup Time	The length of time the sensor can communicate from powered -on to communicating with Modbus, unit: 100 milliseconds.
Measurement Number	Data Logger can collect 0 to 10 measurements in RS485 mode.
Measurement Setting	Set the register of the measurement value and other configurations.

Measurement Setting

Set each measurement in turn

Register Address	The register address of the measured value in the sensor, which is an integer.
Function Code	Modbus function code, supports 01/02/03/04 function code.
Data Type	The data type determines the number of registers read from the sensor and how the data should parse the value. There are some options: Unsigned 16bit integer,0xAB Signed 16bit integer, 0xAB Unsigned 32bit integer, 0xABCD Unsigned 32bit integer, 0xCDAB .....
Precision	Precision of the value. You can choose the decimal place of the measurement value. If 1 is selected, one decimal place is reserved. 0, # 1, #.# 2, #.##

	...
Y= Ax + B	"Y": It is the value of Data Logger will upload. "x": It is the original current value. Factory A: Custom values that can be scaled up or down by multiples of the "x". Factory B: A custom value that increments or diminishes the value of the "x". By setting the values of A and B, you can calculate the desired value. If only raw values are uploaded, set A=1 and B=0.
Write Strategy	This function is enabled only for some special sensors and is generally disabled by default After reading the value of the register, special instructions can be issued to the sensor, such as the instruction to empty the register after reading register 0. None: Off by default. After Read: Send the RS485 command to sensor after reading the register. On New Data: Send the RS485 command to sensor every 24 hours.

7. Connect to the SenseCAP Portal

7.1 SenseCAP Portal

The main function of the SenseCAP Portal is to manage SenseCAP devices and to store data. It is built on Azure, a secure and reliable cloud service from Microsoft. You can apply for an account and bind all devices to this account. SenseCAP provides the web portal and API. The web portal includes Dashboard, Device Management, Data Management, and Access Key Management, while API is open to users for further development.

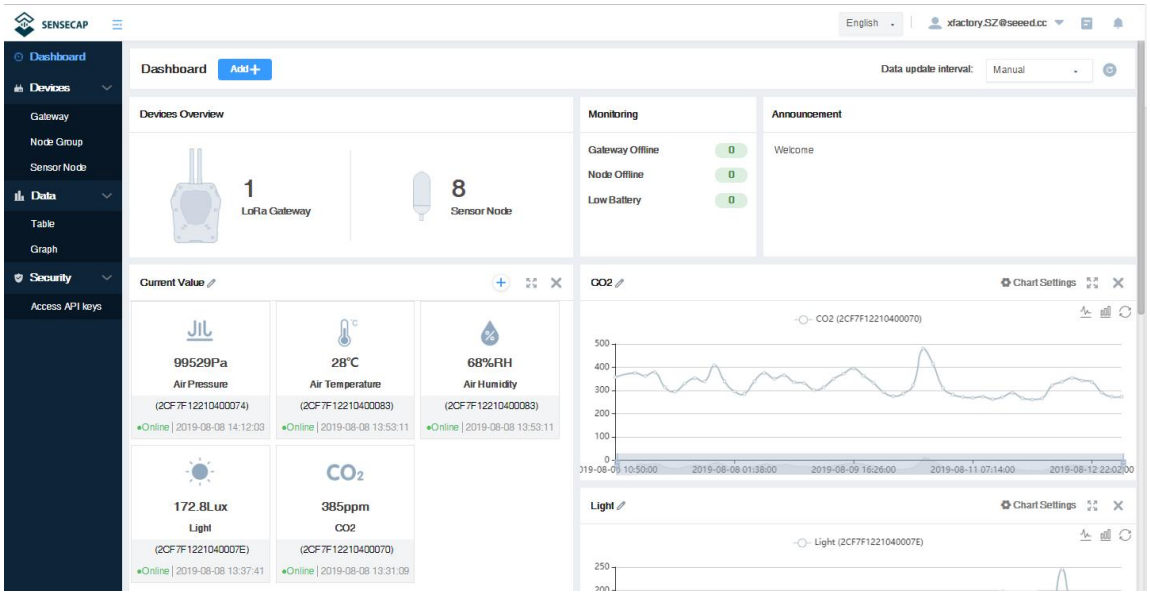

7.1.1 Create a New Account

Portal Website: http://sensecap.seeed.cc

4) Select register account, enter email information and click "register", the registered email will be sent to the user's mailbox.

5) Open the "SenseCAP..."Email, click the jump link, fill in the relevant information, and complete the registration.

6) Return to the login interface and complete the login.

Note:

If you can't find the email, it may be automatically identified as "spam" and put in the "trash can".

7.1.2 Other Functions

- **Dashboard:** Including Device Overview, Announcement, Scene Data, and Data Chart, etc.
- **Device Management:** Manage SenseCAP devices.
- **Data Management:** Manage data, including Data Table and Graph section, providing methods to search for data.
- **Subaccount System:** Register subaccounts with different permissions.
- **Access Key Management:** Manage Access Key (to access API service), including Key Create, Key Update, and Key Check.

Note:

SenseCAP Portal User Guide: https://sensecap-docs.seeed.cc/quickstart.html

7.1.3 API Instruction

SenseCAP API is for users to manage IoT devices and data. It includes 3 types of API methods: HTTP protocol, MQTT protocol, and Websocket protocol.

- With HTTP API, users can manage LoRa devices, to get raw data or historical data.
- With MQTT API, users can subscribe to the sensor's real-time measurement data through the MQTT protocol.
- With Websocket API, users can get real-time measurement data of sensors through Websocket protocol.

Please refer to this link for API User Guide: https://sensecap-docs.seeed.cc/

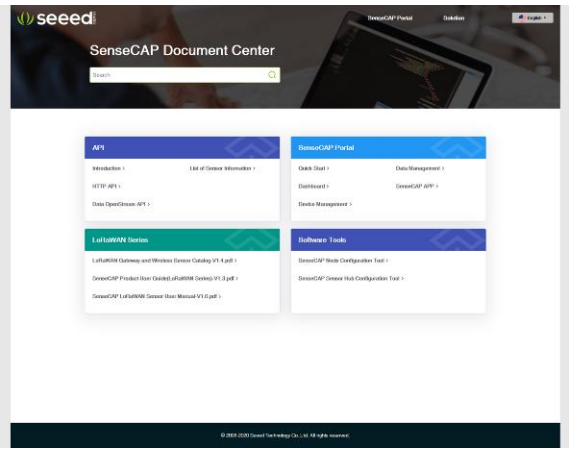

7.2 Connect to SenseCAP with Helium Network

7.2.1 Quick Start

Follow this process to quickly use the sensor, see the following section for details.

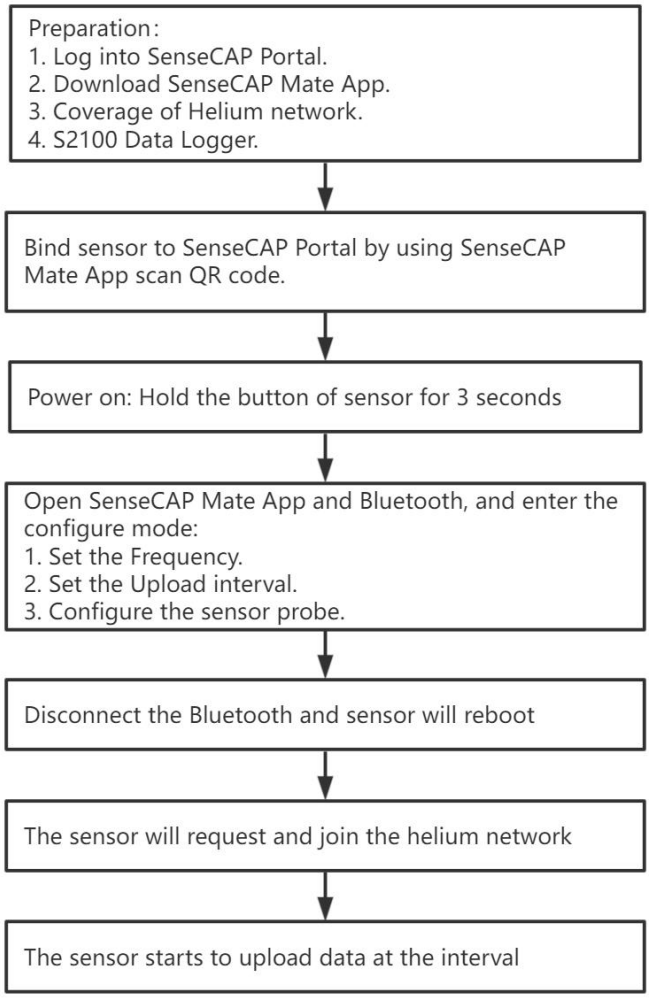

7.2.2 Preparation

1) SenseCAP Mate App

Download the App, please refer to section 5 for using.

2) Coverage of Helium network

Option 1: Use the Helium network that already exists nearby.

Please refer to the map, search your location to see if there's any helium network around: https://explorer.helium.com/

A green hexagon indicates the presence of the network.

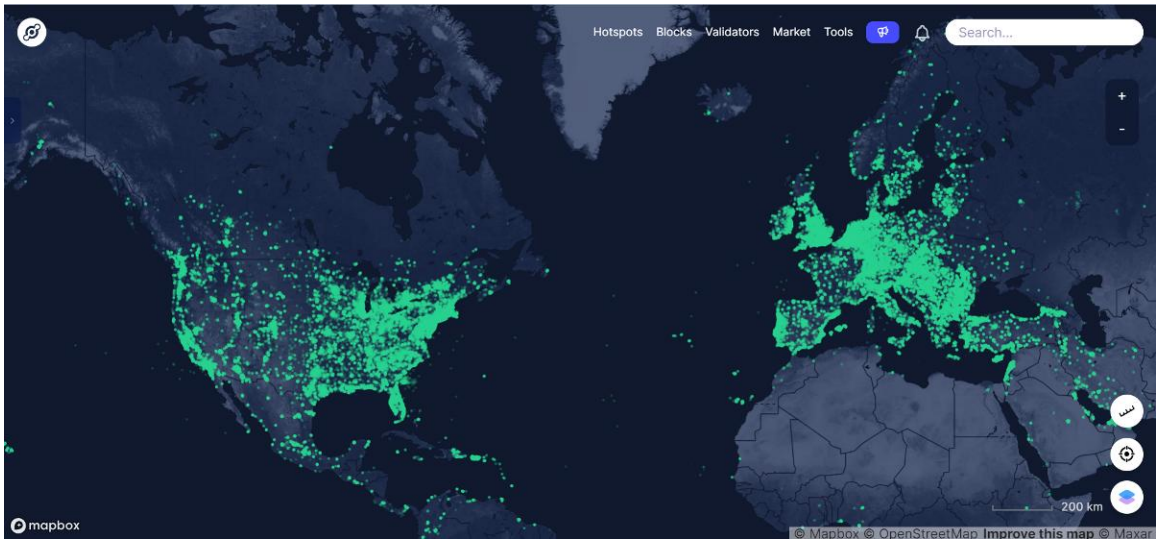

Option 2: Deploy a new Helium gateway.

You can purchase M1, M2 gateways to cover your surroundings with the Helium network: https://www.sensecapmx.com/

7.2.3 Bind Sensor to SenseCAP Portal

Please open SenseCAP Mate App.

(1) Scan QR Code

1) Click "Add device" on the upper-right corner of device page to enter the device binding page.

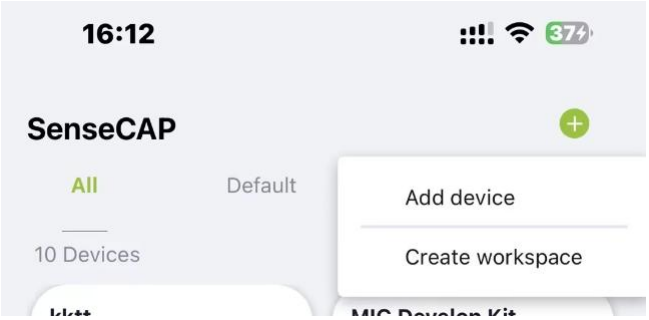

2) Scan the QR code on the device to bind the device to your account. If you do not set it to a designated group, the device will be put into the "default" group.

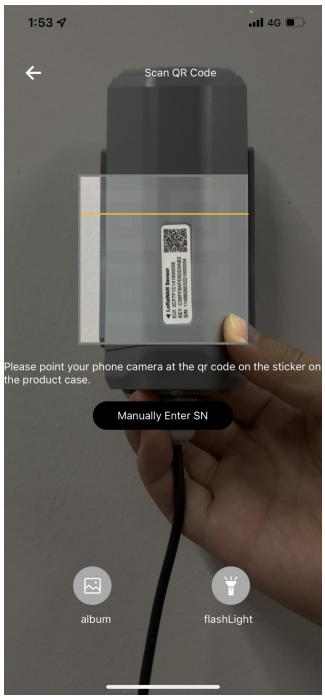

(2) Manually fill in the EUI

If the QR code sticker is damaged, you can manually fill in the EUI of the device to bind the device to your account. Please make sure you put in the EUI in the format suggested by the system and then click “confirm”.

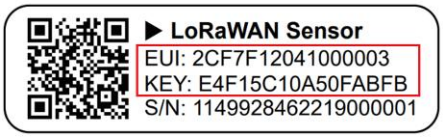

7.2.4 Setup the Sensor

1) Open the SenseCAP Mate App

2) Press button and hold for **3 seconds**, the LED will flash at 1s frequency.

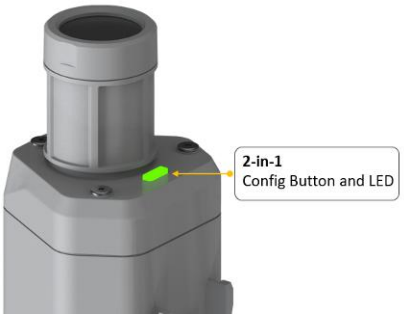

3) Please click the “Setup” button to turn on Bluetooth and click “Scan” to start scanning the sensor's Bluetooth.

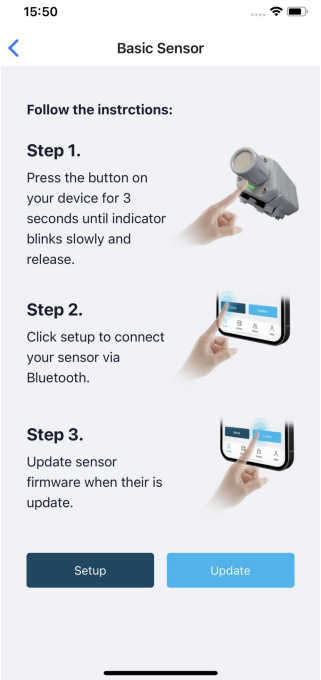

4) Select the Sensor by S/N (label). Then, the basic information of the sensor will be displayed after entering.

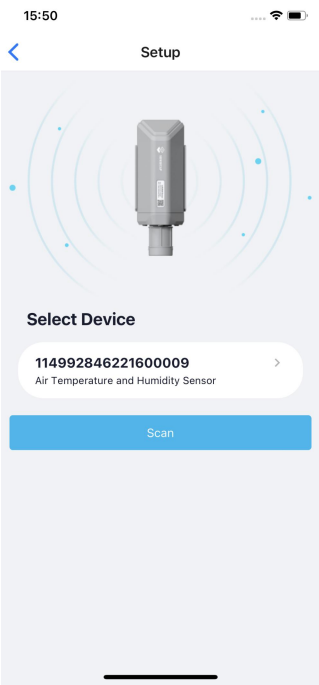

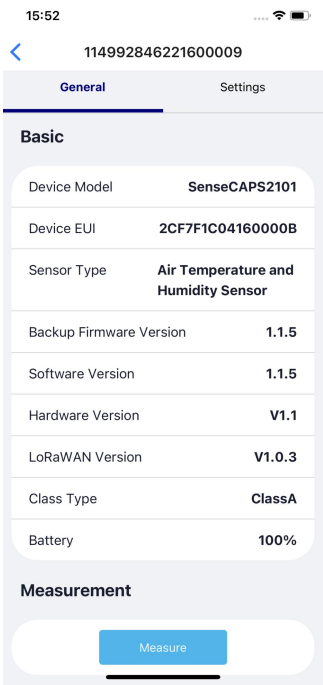

7.2.5 Set Frequency of Sensor via SenseCAP Mate App

Set the corresponding frequency band based on the frequency band of the gateway.

Please refer to section 5 for detail.

1) Click the "Setting" and select the platform is "**SenseCAP for Helium**".

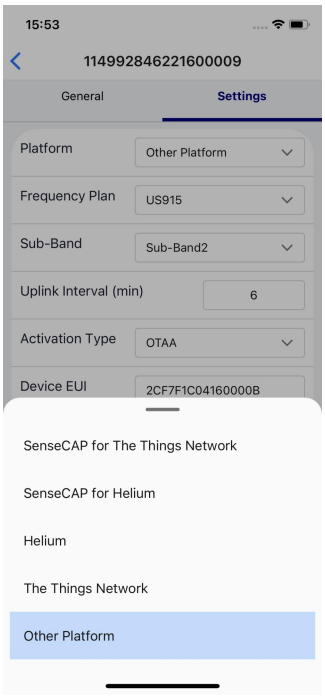

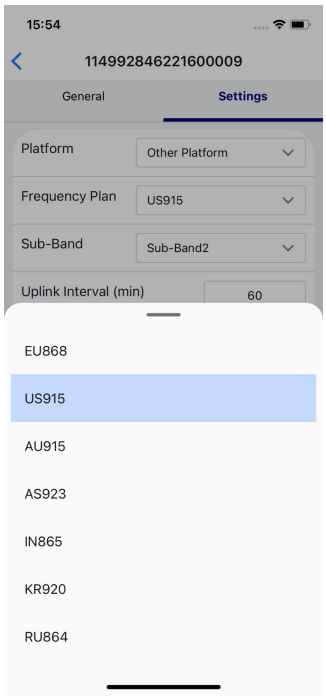

2) Select the Frequency Plan, if the gateway is US915, set the sensor to US915.

3) Click the "Send" button, send the setting to the sensor for it to take effect.

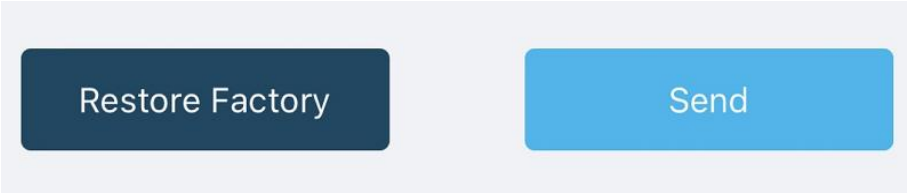

4) Click the "Home" button, the App will disconnect the Bluetooth connection.

   Then, the sensor will reboot.

5) When the device is disconnected from Bluetooth, the LED lights up for **5 seconds** and then flashes as a **breathing light**.

6) After joining the network successfully, LED **flashes fast for 2s**.

7.2.6 Check Data on SenseCAP Portal

On the SenseCAP App or the website http://sensecap.seeed.cc/ , you can check the device online status and the latest data. In the list for each Sensor, you can check its online status and the time of its last data upload.

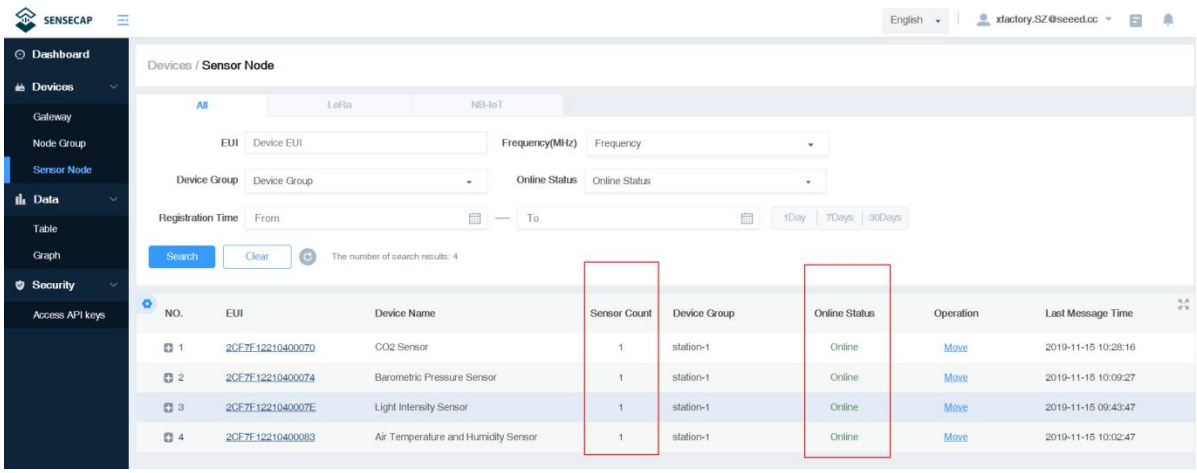
SENSECAP
English
xfactory.SZ@seeed.cc
Dashboard
Devices
Gateway
Node Group
Sensor Node
Data
Table
Graph
Security
Access API keys
Devices / Sensor Node
All
LoRa
NB-IoT
EUI
Device EUI
Frequency(MHz)
Frequency
Device Group
Device Group
Online Status
Online Status
Registration Time
From
To
1Day
7Days
30Days
Search
Clear
The number of search results: 4
NO.
EUI
Device Name
Sensor Count
Device Group
Online Status
Operation
Last Message Time
1
2CF7F12210400070
CO2 Sensor
1
station-1
Online
Move
2019-11-15 10:28:16
2
2CF7F12210400074
Barometric Pressure Sensor
1
station-1
Online
Move
2019-11-15 10:09:27
3
2CF7F1221040007E
Light Intensity Sensor
1
station-1
Online
Move
2019-11-15 09:43:47
4
2CF7F12210400083
Air Temperature and Humidity Sensor
1
station-1
Online
Move
2019-11-15 10:02:47

7.3 Connect to SenseCAP with private TTN

7.3.1 Quick Start

Follow this process to quickly use the sensor, see the following section for details.

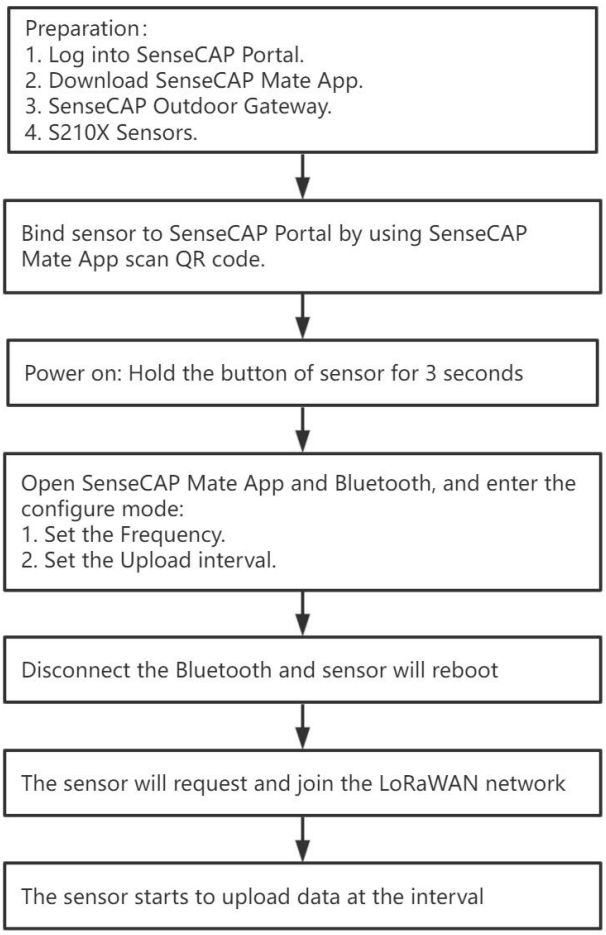

7.3.2 Preparation

1) SenseCAP Mate App

Download the App, please refer to section 5 for using.

2) SenseCAP Outdoor Gateway

Now, the sensor needs to be used with the SenseCAP Outdoor Gateway (https://www.seeedstudio.com/LoRaWAN-Gateway-EU868-p-4305.html) to transmit data to the SenseCAP Portal.

a) Setup the Gateway, connect to power cable and Internet.

b) Bind the gateway to SenseCAP Portal.

c) Ensure the gateway indicator is steady on.

d) Ensure the gateway is displayed online on the portal.

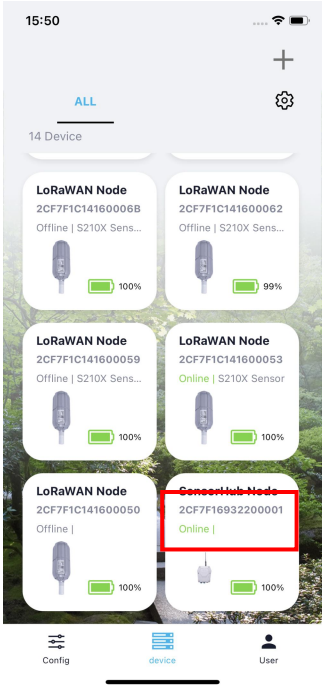

7.3.3 Bind Sensor to SenseCAP Portal

Please refer to the section 6.2.3

7.3.4 Setup the Sensor

Please refer to the section 6.2.4

7.3.5 Set Frequency of Sensor via SenseCAP Mate App

Set the corresponding frequency band based on the frequency band of the gateway.

Please refer to section 5 for detail.

1) Click the "Setting" and select the platform is "**SenseCAP for The Things Network**".

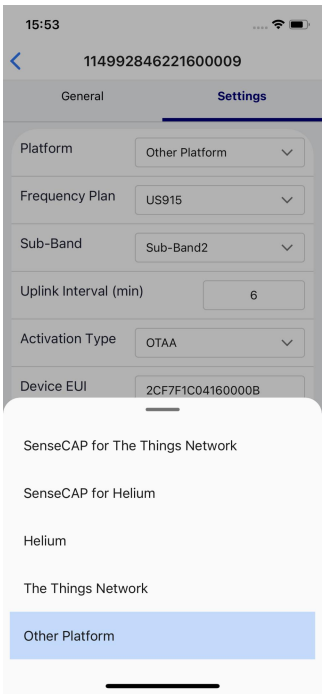

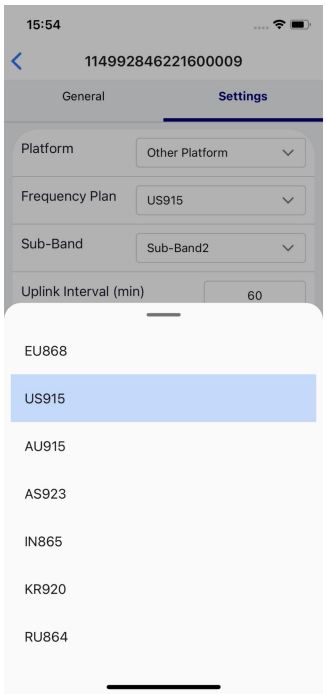

2) Select the Frequency Plan, if the gateway is US915, set the sensor to US915.

3) Click the "Send" button, send the setting to the sensor for it to take effect.

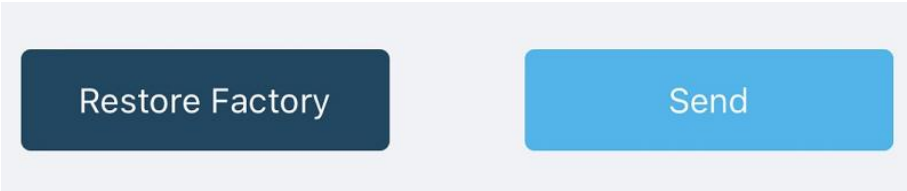

4) Click the "Back to Home" button, the App will disconnect the Bluetooth connection.

   Then the sensor will reboot.

5) When the device is disconnected from Bluetooth, the LED lights up for **5 seconds** and then flashes as a **breathing light**.

6) After joining the network successfully, LED **flashes fast for 2s**.

7.3.6 Check Data on SenseCAP Portal

Please refer to the section 6.2.6

8. Connect to Helium Network

Please refer to the manual to connect sensors to Helium public console:

https://files.seeedstudio.com/products/SenseCAP/S210X/How%20to%20Connect%20SenseCAP%20S210X%20to%20Helium%20Network.pdf

9. Connect to The Things Network

Please refer to this manual:

https://files.seeedstudio.com/products/SenseCAP/S210X/How%20to%20Connect%20SenseCAP%20S210X%20to%20The%20Things%20Network.pdf

Please refer to the link to use the TTN platform:

The Things Network website: https://www.thethingsnetwork.org

The Things Industries login: https://accounts.thethingsindustries.com/login

TTN Quick Start: https://www.thethingsnetwork.org/docs/quick-start/

10. Payload Decoder

10.1 Decoder Code

TTN payload decoding script for SenseCAP LoRaWAN:

https://github.com/Seeed-Solution/TTN-Payload-Decoder/blob/master/SenseCAP_LoRaWAN_V2_Decoder.js

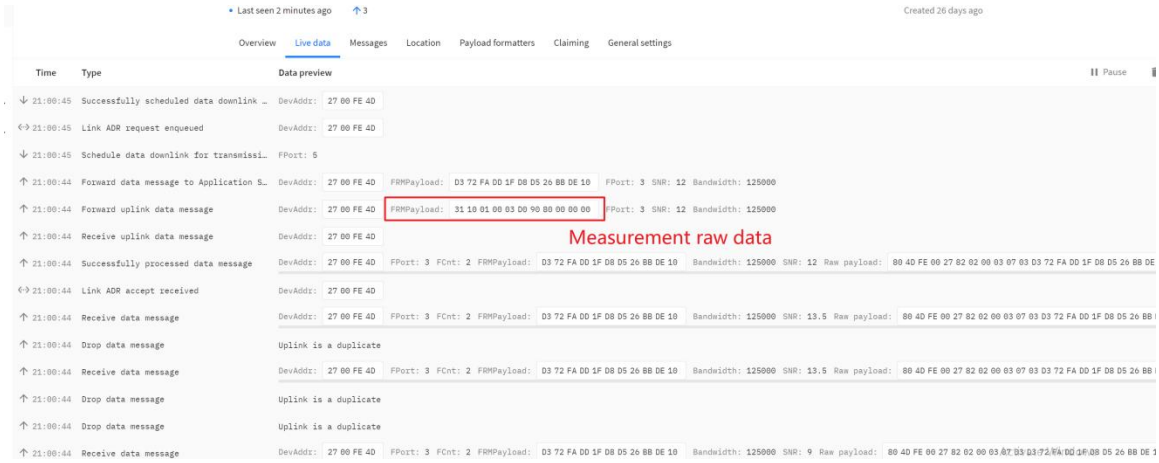

10.2 Packet Parsing

10.2.1 Packet Initialization

After being powered on or reboot, SenseCAP Sensors will be connected to the network using the OTAA activation method. Each Sensor Node will send data packets to the server, including the following data:

The data logger protocol provides 3 types of packets to correspond to different information such as measurements, and the number of bytes of each packet may vary. The structure of the frame is shown in the below. The frame content is sent in big-endian byte order.

0x31: Measurements ≤2, send the packet ID at 0x31.

31	Byte 2	Byte3	Byte 4	Byte 5	Byte 6	Byte7	Byte8	Byte9	Byte10	Byte11
ID	Measurement m and n	Flag bit	The value of Measurement m				The value of Measurement n			

Byte2: The measurement ID ranges from 1 to 10. It corresponds to the measurement number.

Byte 3: The bit1 indicates the reserved flag bit, bit2 to bit8 are fixed to 1.

0x30/0x32/0x33: When the number of measurements > 2, there are three types of packets: first(0x30), middle(0x32), and final(0x33). Each package includes 2 measurements.

30	Byte2	Byte3	Byte4	Byte5	Byte6	Byte7	Byte8	Byte9	Byte10	Byte11
ID	Measurement m and n	Flag bit and total packet number	The value of Measurement m				The value of Measurement n			

Byte2: The measurement ID ranges from 1 to 10. It corresponds to the measurement number.

Byte 3: The bit1 indicates the reserved flag bit. The bit2 to the bit5 indicates the total number of uploaded packets, bit6 to bit8 are fixed to 1.

32	Byte2	Byte3	Byte4	Byte5	Byte6	Byte7	Byte8	Byte9	Byte10
ID	Measurement m and n	The value of Measurement m				The value of Measurement n			

33	Byte2	Byte3	Byte4	Byte5	Byte6	Byte7	Byte8	Byte9	Byte10	Byte11
I	Measure	Flag bit and	The value of Measurement				The value of Measurement n			

D	men t m and n	total packet numbe r	m	

Byte 3: The bit1 indicates the reserved flag bit. The bit2 to the bit5 indicates the total number of uploaded packets, bit6 to bit8 are fixed to 1.

0x39: Battery package

39	Byte2	Byte3	Byte 4	Byte 5	Byte 6	Byte 7	Byte8	Byte9	Byte10
ID	Batte ry Level	Software & Hardware Version				Measurement Uplink Interval		Reserved	

10.3 Data Parsing Example

10.3.1 Example - one measurement

Air Temperature and Humidity Sensor measurement packet:

31 10 01 000067DE 80000000

Part	Value	Raw Data	Description
31	ID	31	31 is the package ID.
Byte2	Measurement 1	10	1: Measurement 1 0: No measurements.
Byte3	Flag bit	01	01: The reserved flag bit can be ignored.
Byte4~Byte7	The value of Measurement 1	000067DE	000067DE is 0x000067DE, whose equivalent decimal value is 26590. Divide it by 1000, and

			you will get the actual measurement value for air temperature as 26.59 ℃.
Byte 8~Byte11	None	80000000	80000000 mean no measurements.

10.3.2 Example - two measurements

Air Temperature and Humidity Sensor measurement packet:

31 12 02 000067DE 0000C26A

Part	Value	Raw Data	Description
31	ID	31	31 is the package ID.
Byte2	Measurement	12	1: Measurement 1 2: Measurement 2
Byte3	Flag bit	02	01: The reserved flag bit can be ignored.
Byte4~Byte7	The value of Measurement 1	000067DE	000067DE is 0x000067DE, whose equivalent decimal value is 26590. Divide it by 1000, and you will get the actual measurement value for air temperature as 26.59 ℃.
Byte 8~Byte11	The value of Measurement 2	0000C26A	0000C26A is 0x0000C26A, whose equivalent decimal value is 49770. Divide it by 1000, and you will get the actual value for air humidity as 49.77%RH.

10.3.3 Example - four measurements

Air Temperature, Humidity, Barometric pressure and Light intensity Sensor measurement packet:

30 12 02 000067DE 0000C2A6 33 34 02 05F98A88 00019A28

Part	Value	Raw Data	Description

30	ID	30	31 is the package ID.
Byte2	Measurement	12	1: Measurement 1 2: Measurement 2
Byte3	Flag bit	02	02: The reserved flag bit can be ignored.
Byte4~Byte7	The value of Measurement 1	000067DE	000067DE is 0x000067DE, whose equivalent decimal value is 26590. Divide it by 1000, and you will get the actual measurement value for air temperature as 26.59 ℃.
Byte 8~Byte11	The value of Measurement 2	0000C26A	0000C26A is 0x0000C26A, whose equivalent decimal value is 49770. Divide it by 1000, and you will get the actual value for air humidity as 49.77%RH.
33	ID	33	33 is the package ID.
Byte13	Measurement	34	3: Measurement 3 4: Measurement 4
Byte14	Flag bit	02	02: The reserved flag bit can be ignored.
Byte15~Byte18	The value of Measurement 3	05F98A88	05F98A88 is 05F98A88, whose equivalent decimal value is 100240008. Divide it by 1000, and you will get the actual measurement value for Barometric pressure 100240.008 Pa.
Byte 19~Byte22	The value of Measurement 4	00019A28	00019A28 is 0x00019A28, whose equivalent decimal value is 105000. Divide it by 1000, and you will get the actual value for Light intensity as 105Lux.

10.3.4 Example - six measurements

Air Temperature, Humidity, Barometric pressure, Light intensity, Average wind direction, and Average wind direction Sensor measurement packet:

30 12 03 000067DE 0000BBB2 32 34 05F62F28 00036EE8 33 56 03 0000FFDC 00000514

Part	Value	Raw Data	Description
30	ID	30	31 is the package ID.
Byte2	Measurement	12	1: Measurement 1 2: Measurement 2
Byte3	Flag bit	03	03: The reserved flag bit can be ignored.
Byte4~Byte7	The value of Measurement 1	000067DE	000067DE is 0x000067DE, whose equivalent decimal value is 26590. Divide it by 1000, and you will get the actual measurement value for air temperature as 26.59 ℃.
Byte 8~Byte11	The value of Measurement 2	0000BBB2	0000BBB2 is 0x0000BBB2, whose equivalent decimal value is 48050. Divide it by 1000, and you will get the actual value for air humidity as 48.05％RH.
32	ID	32	32 is the package ID.
Byte13	Measurement	34	3: Measurement 3 4: Measurement 4
Byte14~Byte17	The value of Measurement 3	05F62F28	05F62F28 is 0x05F62F28, whose equivalent decimal value is 100020008. Divide it by 1000, and you will get the actual measurement value for Barometric pressure 100020.008 Pa.
Byte 18~Byte21	The value of Measurement 4	00036EE8	00036EE8 is 0x00036EE8, whose equivalent decimal value is 225000. Divide it by 1000, and you will get the actual value for Light intensity as 225 Lux.
33	ID	33	33 is the package ID.
Byte23	Measurement	56	5: Measurement 5

			6: Measurement 6
Byte24~Byte27	Flag bit	03	03: The reserved flag bit can be ignored.
Byte25~Byte28	The value of Measurement 5	0000FFDC	0000FFDC is 0x0000FFDC, whose equivalent decimal value is 65500. Divide it by 1000, and you will get the actual measurement value for Average wind direction as 65.5°.
Byte29~Byte32	The value of Measurement 6	00000514	00000514 is 0x00000514, whose equivalent decimal value is 1300. Divide it by 1000, and you will get the actual value for Average wind speed as 1.3 m/s.

10.3.5 Battery Information

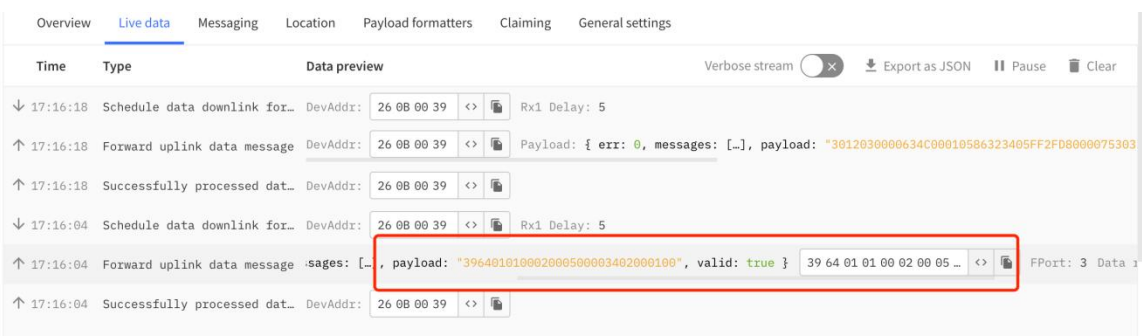

Original Info:

39 64 01010002 00050000 3402000100

3402000100 is a status package which can be ignored.

Battery Package: 39 64 01010002 00050000

Part	Value	Raw Data	Description
39	ID	39	39 is the package ID.
Byte2	Battery Level	64	64 is actually 0x64, whose equivalent decimal value is 100. the actual battery value for device is 100%.
Byte3~Byte6	Software & Hardware Version	01010002	0x01010002 -> 1.1-0.2 Software Version 1.1 Hardware Version 0.2
Byte7~Byte8	Measurement Uplink Interval	0005	0005 is actually 0x0005,whose equivalent decimal value is 5. The actual uplink interval is 5 minutes.
Byte9~Byte10	Reserved	0000	Reserved Value 0000

11. LoRaWAN Downlink Command

11.1 Set the Data Uplink Interval

(1) Using the Network Server's portal or API to send downlink command. The downlink command takes effect and responds the next time the node uploads data.
(2) Downlink as follow:

0x80	0x00	0x00	duty_H	duty_L

0x80	Fixed field
0x00	Fixed field
0x00	Fixed field
duty_L	Data interval low byte, you can set the data interval, unit: minute
duty_H	Data interval high byte, you can set the data interval, unit: minute

(3) Use the FPort = 3

Example: Set the Node's data interval is 10 minutes.

Send the downlink command (HEX) via FPort=3:

80 00 00 00 0A

0x80	0x00	0x00	duty_H	duty_L
80	00	00	00	0A

Command List:

Description	Command
Set Uplink interval = 1 minute	8000000001
Set Uplink interval = 5 minutes	8000000005
Set Uplink interval = 10 minutes	800000000A
Set Uplink interval = 15 minutes	800000000F
Set Uplink interval = 20 minutes	8000000014

Set Uplink interval = 30 minutes	800000001E
Set Uplink interval = 60 minutes	800000003C

11.2 Reboot the device

FPort = 2

Command: 00C800000000002B26

11.3 How to send downlink

Example: use the TTN to send, and change the interval to 10mins.

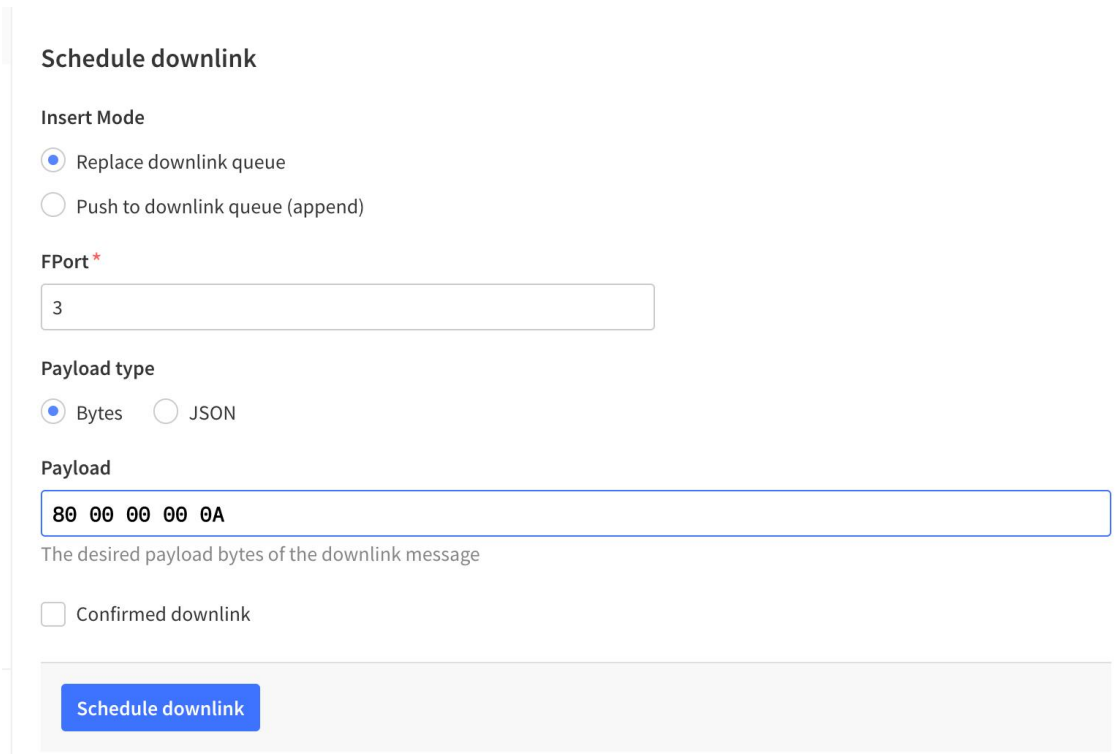

***Note**: Please do not select 'Confirmed downlink' which is in developing.

12. Error Code

12.1 Details

If you're experiencing these error code, you could contact us for debugging:

sensecap@seeed.cc

Type	Error Code(Hex)
SENSOR_ERROR_NONE	0x00
SENSOR_NOT_FOUND	0x01
SENSOR_WAKEUP_ERROR	0x02
SENSOR_NOT_RESPONSE	0x03
SENSOR_DATA_EMPTY	0x04
SENSOR_DATA_HEAD_ERROR	0x05
SENSOR_DATA_CRC_ERROR	0x06
SENSOR_DATA_B1_INVALID	0x07
SENSOR_DATA_B2_INVALID	0x08
SENSOR_RANDOM_NOT_MATCH	0x09
SENSOR_PUBKEY_SIGN_VERIFY_FAILED	0x0A
SENSOR_DATA_SIGN_VERIFY_FAILED	0x0B
SENSOR_DATA_VALUE_HI	0x0C
SENSOR_DATA_VALUE_LOW	0x0D
SENSOR_DATA_VALUE_MISSED	0x0E
SENSOR_ARG_INVAILD	0x0F
SENSOR_RS485_MASTER_BUSY	0x10
SENSOR_RS485_REV_DATA_ERROR	0x11
SENSOR_RS485_REG_MISSED	0x12
SENSOR_RS485_FUN_EXE_ERROR	0x13
SENSOR_RS485_WRITE_STRATEGY_ERROR	0x14
SENSOR_CONFIG_ERROR	0x15
SENSOR_DATA_ERROR_UNKONW	0xFF

Detailed error reporting uses frame IDs 0x12, 0x13 (first), 0x14 (middle), and 0x15 (final) to track multi-measurement packets. Consider the example such as 13 01 00 01 03: the frame begins with ID 0x13, and the error code is contained in the final byte (0x03), indicating "SENSOR_NOT_RESPONSE".

13. Device Installation

13.1 Check the waterproof performance of the device

13.1.1 Data logger connection port

1) Check the connection position of the probe of the Datalogger to ensure that the screw cap is tightened.

2) The waterproof tape can be used to wrap the connection around many circles to strengthen the waterproof performance.

13.1.2 Waterproof check

When assembling the device, it is necessary to install the waterproof pad of the Data Logger and the adapter box, and tighten the screw cap and screw, otherwise the waterproof effect of the device may be affected!

If the wire diameter is too small, it can be wrapped with waterproof tape, as shown below:

13.2 Installing Sensor

13.2.1 Installing the Sensor Bracket

Specially designed for installing SenseCAP Sensors, the bracket is a sliding cap. With designated screw-holes, the bracket helps fasten the Sensor Node firmly onto a pole or a wall.

1) With the sensor in one hand and a bracket in the other, find an unobstructed direction along the back of the sensor.

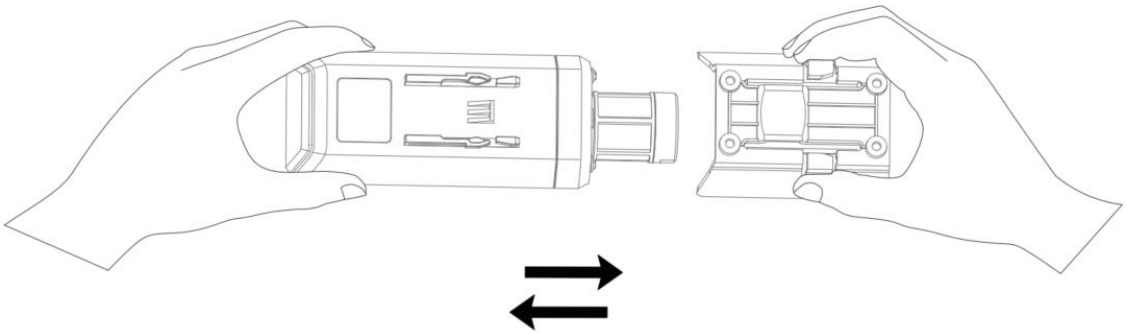

2) One hand holds the clasp while the other holds the device. Pull outward with opposite force. Press the upper part of the buckle with your finger.

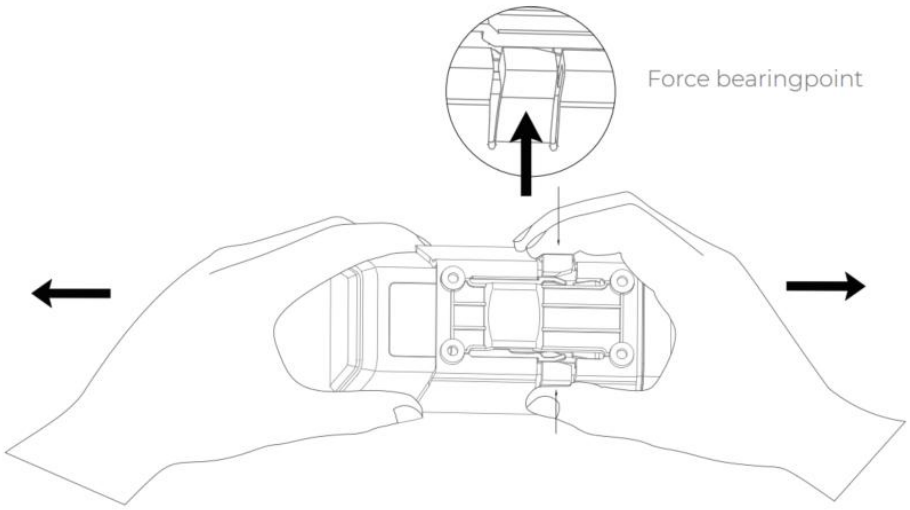

13.2.1 Mount on Pole and Wall

1) Mount on pole

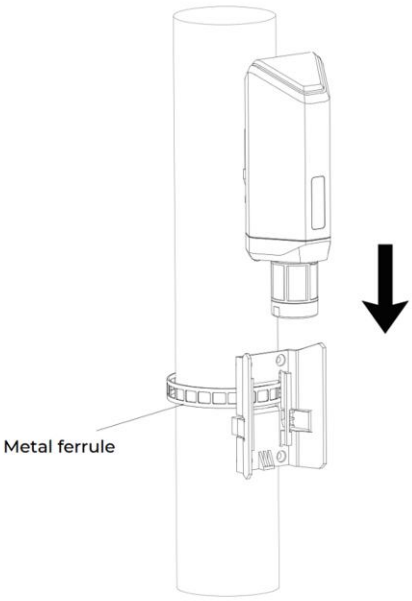

2) Mount on wall

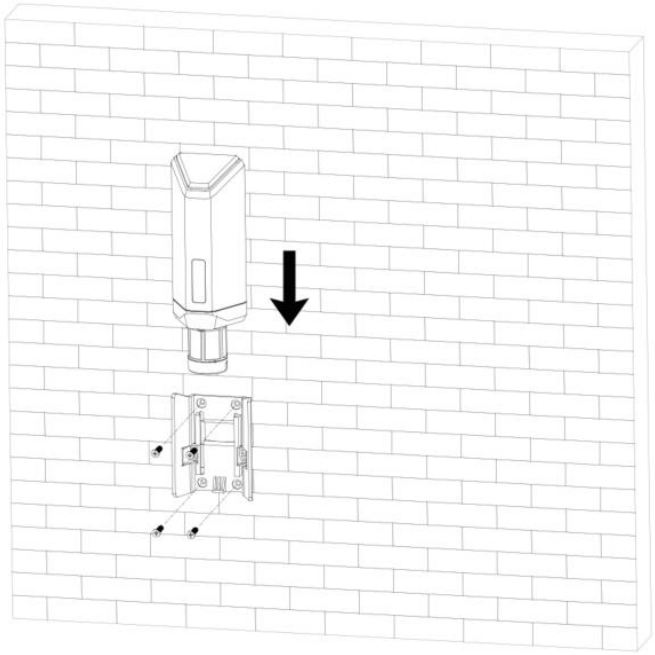

13.3 Replace the Battery

13.3.1 How to Buy the Battery

We suggest buying it from Amazon.

1) EEMB ER34615: Click here

2) Search the key word: LiSOCl2 ER34615 battery. Compare the batteries that meet the following parameters. The most important thing is to match the voltage.

Battery Specification	
Nominal capacity	19000mAh
Model	Li-SOCl2, ER34615
Nominal voltage	3.6V
Max. continuous current	230mA
Max. pulse current capability	400mA
Dimension	⌀ 34.0*61.5mm (D size)

	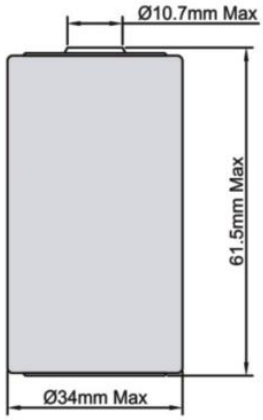
Operating temperature range	-60℃ to 85℃

13.3.2 How to Replace a New Battery

1) Remove three screws.

Note:

The sensor and PCBA are connected by wire, please disassemble carefully.

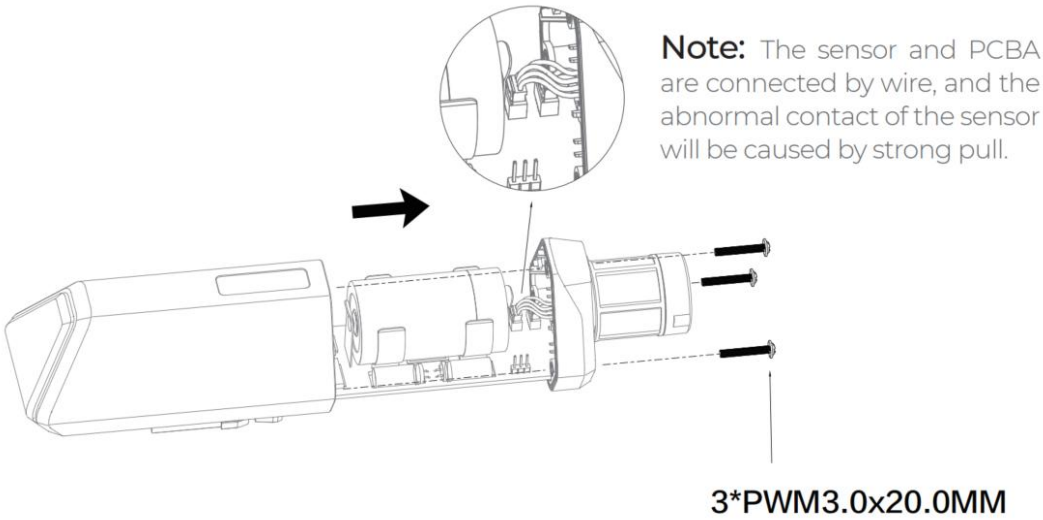

2) Install a new battery.

Note:

Pay attention to the positive and negative terminals of the battery.

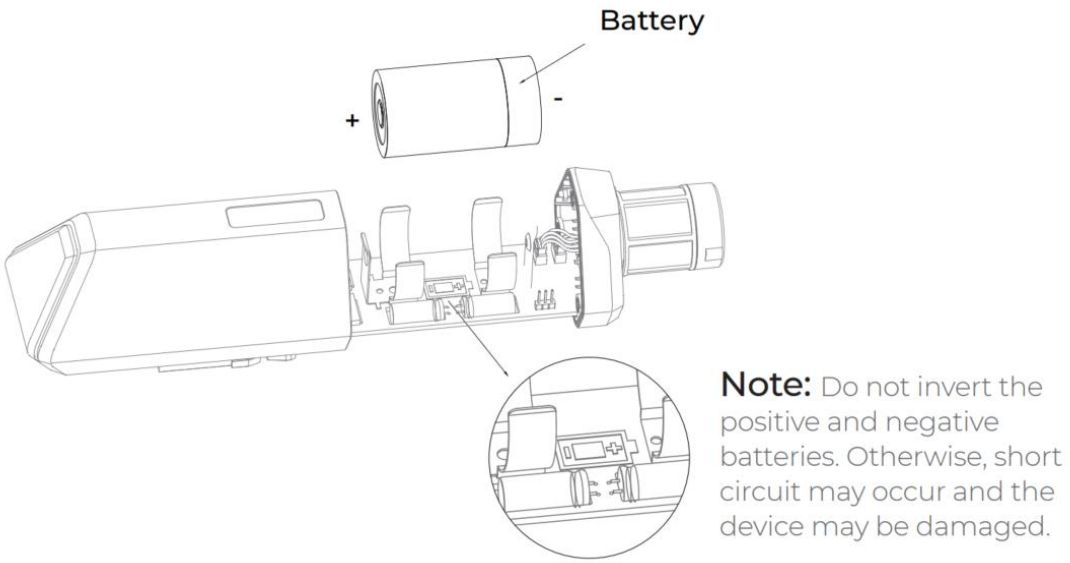

3) Install screws.

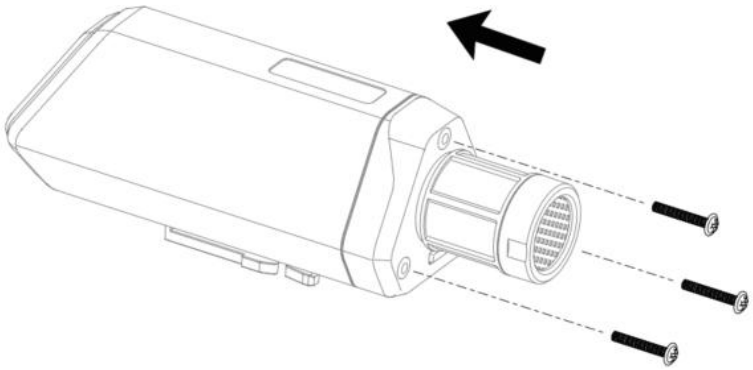

Note:

During the installation, ensure that the waterproof washer is properly installed and the screws are locked; otherwise, water will flow into the device.

14. Trouble Shooting

14.1 Sensors can't join LoRa network, how to do?

1) Check the gateway frequency configuration. Make sure the gateway and Sensor Node have the same uplink and downlink frequency.

2) Check the real-time log and RESET the sensor to see if there are any sensor data packets. If there are packets, check whether the gateway is sending downlink packets.

3) If the channels and other configurations are correct and the gateway logs do not have packets, please contact technical support.

14.2 Why is the new sensor's battery not 100%?

Battery power detection is not high precision. Its principle is to measure the supply voltage, when the power is turned on and repeatedly RESET, the voltage is unstable, so it is not 100%. When the sensor is stable, the power will be more accurate.

14.3 Support

Support is provided Monday to Friday, from 09:00 to 18:00 GMT+8. Due to different time zones, we cannot offer live support. However, your questions will be answered as soon as possible in the before-mentioned schedule.

Provide as much information as possible regarding your enquiry (product models, accurately describe your problem and steps to replicate it etc.) and send a mail to: sensecap@seeed.cc

14.4 Document Version

Version	Date	Description	Editor
V1.0.0	9/05/2022	First edition	Jenkin Lu
V1.1.0	9/23/2022	Second edition	Kelvin Lee
V1.1.1	9/30/2022	Modifying data Parsing	Kelvin Lee
V1.1.2	9/30/2022	Modifying battery information	Kelvin Lee
V1.1.3	12/1/2022	Delete "Work Mode"	Kelvin Lee
V1.2.1	12/16/2022	Modifying downlink	Kelvin Lee
V1.2.2	8/17/2023	Update App setting	Lee